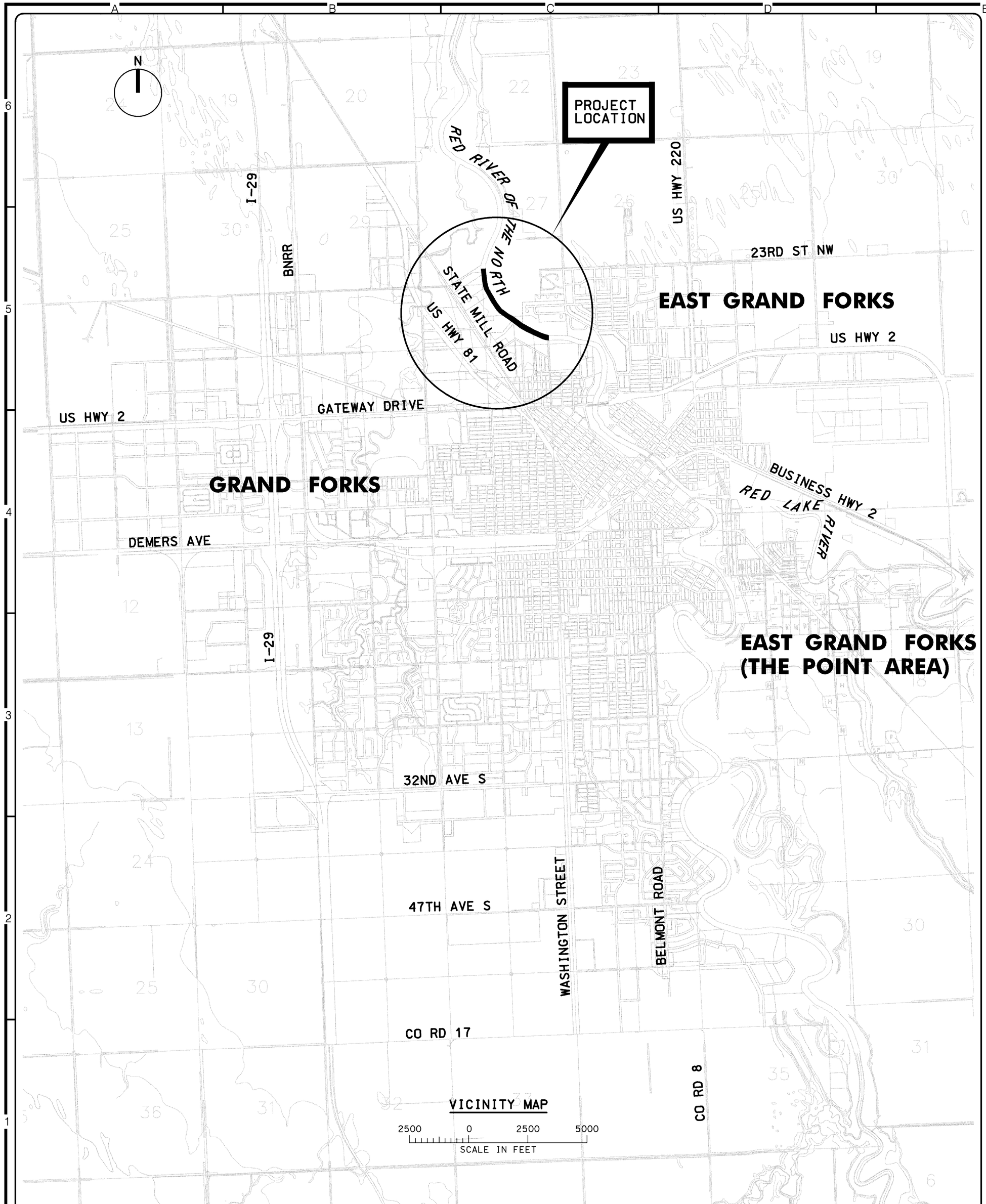

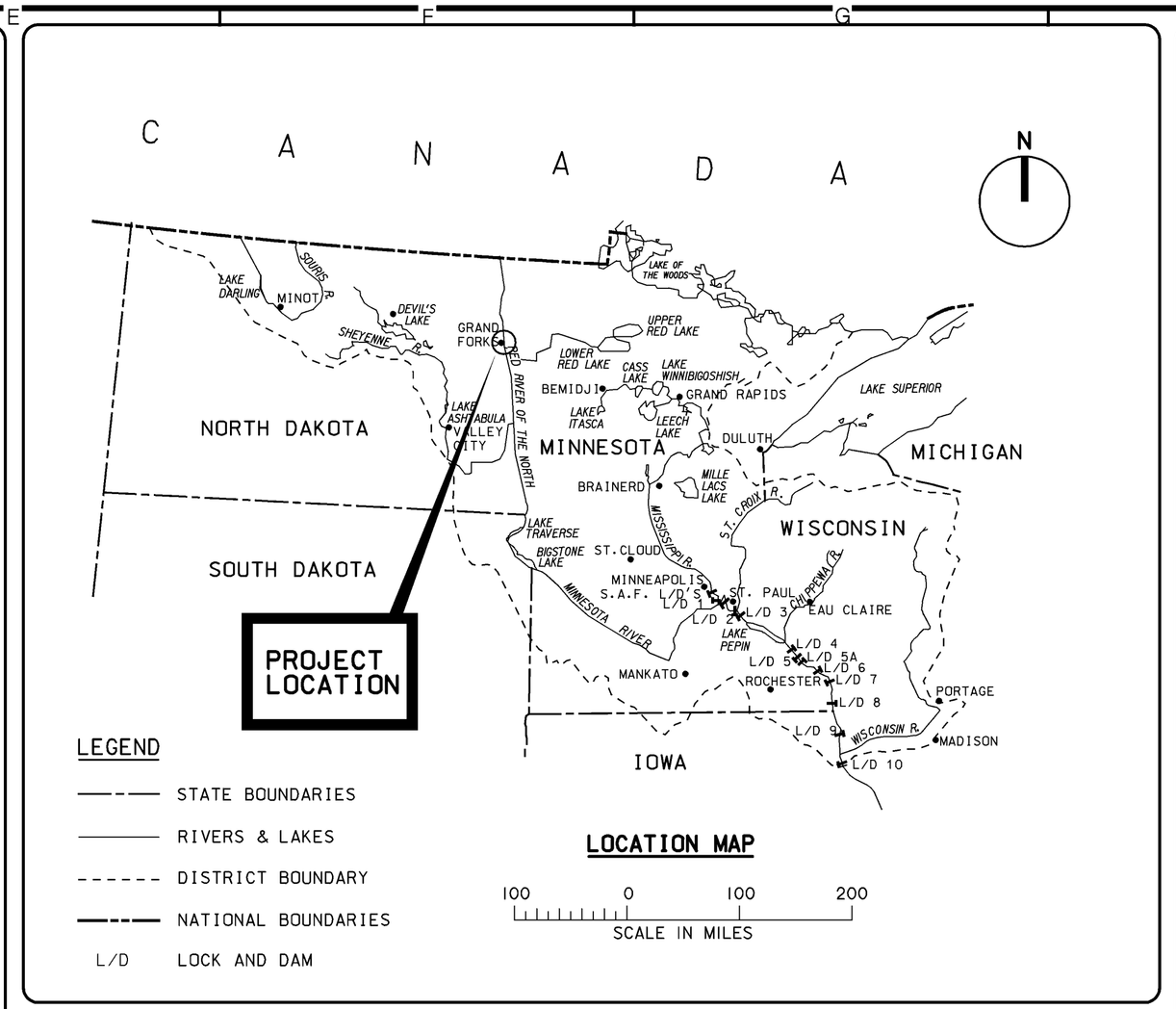

THE NAMES BELOW INDICATE THE OFFICIALS THAT ORIGINALLY SIGNED THE SET OF DRAWINGS. THIS DRAWING HAS SINCE BEEN REVISED AND REPLOTTED, AND NEW SIGNATURES WERE NOT OBTAINED.

APPROVAL RECOMMENDED BY:

ALLEN L. GEISEN, P.E.
CHIEF ED-D BRANCH

MICHAEL R. KNOFF
CHIEF ED-H BRANCH

JOHN J. BAILEN
CHIEF ENGINEERING DIVISION

THIS PROJECT WAS DESIGNED BY THE ST. PAUL DISTRICT CORPS OF ENGINEERS. THE INITIALS OR SIGNATURES AND REGISTRATION NUMBERS OF THE INDIVIDUALS APPEAR ON THESE PROJECT DOCUMENTS WITHIN THE SCOPE OF THEIR EMPLOYMENT AS REQUIRED BY ER 1110-1-8152. SIGNATURES INDICATE OFFICIAL RECOMMENDATION OF ALL DRAWINGS IN THIS SET.

APPROVED BY:

KENNETH S. KASPRISIN, P.E.
DISTRICT COMMANDER

N/A	CHIEF MECH/ELEC/ARCH SECTION
DAVID RYDEEN	CHIEF GEOTECHNICAL & GEOLOGY SECT.
PATRICK M. FOLEY	CHIEF HYDRAULICS SECTION
PATRICK M. FOLEY for	CHIEF HYDROLOGY SECTION
BONNIE K. GREENLEAF	PROJECT MANAGER
JAMES B. MOSNER	CHIEF COST ENGRG & SPECS SECTION
JAMES B. MOSNER	CHIEF GENERAL ENGINEERING SECTION
THOMAS B. SULLY	CHIEF STRUCTURAL ENGINEERING SECTION

US Army Corps of Engineers
St. Paul District

Symbol	Description	Date	Appr.
	AS-BUILT AS OF DECEMBER 2001		

DESIGNED: CAA
CHECKED: RGB
DRAWN: CAA
CHECKED:
SCALE: AS SHOWN
DATE: MAR 2000
CADD FILE NAME: 9G00G001.DGN
DACW37-00-B-0003
DESIGNED:
CHECKED:
ED-D
ED-H
AE APPROVING OFFICIAL:

DEPARTMENT OF THE ARMY
ST. PAUL, MINNESOTA
CORPS OF ENGINEERS
ST. PAUL DISTRICT

CONSTRUCTION DRAWING
FLOOD CONTROL
RED RIVER OF THE NORTH
BANK STAB RIVERSIDE DAM
GF, ND & EGF, MN

BANK STABILIZATION RIVERSIDE DAM

LOCATION & VICINITY MAPS

DRAWING NUMBER:
R-P-GF-00/001

SHT 1 OF 20

AS-BUILT

CONSTRUCTION DRAWING INDEX

DRAWING NO.	SHT	DESCRIPTION	CAD FILE
GENERAL DRAWINGS			
R-P-GF-00/001	1	LOCATION & VICINITY MAPS	GA000001.DGN
R-P-GF-00/002	2	DRAWING INDEX & LEGEND	GA000002.DGN
R-P-GF-10/003	3	GENERAL MAP	CA110003.DGN
CIVIL/SITE DRAWINGS			
R-P-GF-64/002	4	PLAN - BOAT LAUNCH	CA164002.DGN
R-P-GF-64/003	5	PLAN - RDO FOODS	CA164003.DGN
R-P-GF-64/004	6	PLAN - DOWNSTREAM OF RIVERSIDE DAM	CA164004.DGN
R-P-GF-64/005	7	PLAN - RIVERSIDE DAM	CA164005.DGN
R-P-GF-64/006	8	PLAN - RIVERSIDE PARK	CA164006.DGN
R-P-GF-64/007	9	SECTIONS 1 - 3	CA364007.DGN
R-P-GF-64/008	10	SECTIONS 4 - 6	CA364008.DGN
R-P-GF-64/009	11	RIVERSIDE DAM - PLAN VIEW	CA464009.DGN
R-P-GF-64/010	12	RIVERSIDE DAM - SECTIONS	CA464010.DGN
R-P-GF-64/011	13	RIPRAP DETAILS	CA564011.DGN
R-P-GF-64/012	14	PIPE PROFILES - OUTLETS 1 & 3	CA264012.DGN
R-P-GF-64/013	15	PIPE PROFILES - OUTLETS 5 - 6	CA264013.DGN
STRUCTURAL DRAWINGS			
R-P-GF-64/014	16	SEWER OUTLET HEADWALLS - PLAN, SECTION, & SCHEDULE	GFAS464014.DGN
R-P-GF-64/015	17	RIVERSIDE DAM MODIFICATIONS - PLAN & SECTION (MINN. SIDE)	GFAS464015.DGN
R-P-GF-64/015A	18	RIVERSIDE DAM MODIFICATIONS - PLAN & SECTION (N. DAKOTA SIDE)	GFAS464015A.DGN
R-P-GF-64/016	19	SIGN PANEL - ELEVATION, SECTIONS & DETAILS	GFAS464016.DGN
R-P-GF-64/017	20	PANEL FACE LAYOUT - ELEVATIONS	GFAS464017.DGN

REFERENCE DRAWING INDEX

DRAWING NO.	DESCRIPTION	CAD FILE
R-P-GF-364/001	RELOCATE AMERICAN CRYSTAL 24" RCP AND SUB DRAIN IMPROVEMENTS	
R-P-GF-364/002	RIVERSIDE PARK DAM - SITE TOPOGRAPHY WITH EXTENSION OF SURVEY	
R-P-GF-364/003	RIVERSIDE PARK DAM - PLAN & PROFILE	
R-P-GF-364/004	RIVERSIDE PARK DAM - GEOLOGIC PROFILE	
R-P-GF-364/005	RIVERSIDE PARK DAM -1/2 PLAN & 1/2 ELEVATION VIEWS	
R-P-GF-364/006	RIVERSIDE PARK DAM - MISCELLANEOUS DETAILS	
R-P-GF-364/007	RIVERSIDE PARK DAM -1/2 PLAN LAYOUT & MISCELLANEOUS DETAILS	
R-P-GF-364/008	RIVERSIDE PARK DAM - BUTTRESS AND TREAD STEEL COMMON BAY	
R-P-GF-364/009	RIVERSIDE PARK DAM - TRASH RACK DETAILS	
R-P-GF-364/010	RIVERSIDE PARK DAM - DEMOLITION, REMOVAL AND DISPOSAL OF TOP 4 FT OF EX. DAM	
Z2-24	BEST MANAGEMENT PRACTICES FOR EROSION & SEDIMENT CONTROL	STGIP002.DGN
R-P-GF-14/002	HYDROGRAPHIC DATA - HYDROGRAPHS OCT - SEP (1978-1979, 1991-1994)	GF14Y002.DGN
R-P-GF-14/003	HYDROGRAPHIC DATA - HYDROGRAPHS & RATING CURVES OCT - SEPT (1995-1998)	GF14Y003.DGN
R-P-GF-14/004	HYDROGRAPHIC DATA - DISCHARGE DURATION CURVES JANUARY - JUNE (1904-1998)	GF14Y004.DGN
R-P-GF-14/005	HYDROGRAPHIC DATA - DISCHARGE DURATION CURVES JULY - DECEMBER (1904-1998)	GF14Y005.DGN
R-P-GF-10/004	GEOLOGICAL DATA - LEGEND, GENERAL NOTES & BORING LOGS: 85-16M	GFBT210000.DGN
R-P-GF-10/005	GEOLOGICAL DATA - BORING LOGS: 94-14M, 95-30M & 95-31M	GFBT210001.DGN
R-P-GF-10/006	GEOLOGICAL DATA - BORING LOG: 99-147M	GFBT210002.DGN
R-N-GF-11/007	REAL ESTATE - GENERAL MAP	CN164000.DGN
R-N-GF-11/008	REAL ESTATE - BOAT LAUNCH	CN164001.DGN
R-N-GF-11/009	REAL ESTATE - RDO FOODS	CN164002.DGN
R-N-GF-11/010	REAL ESTATE - CITY OF GRAND FORKS WORKSHOPS	CN164003.DGN
R-N-GF-11/011	REAL ESTATE - RIVERSIDE DAM - WEST BANK	CN164004.DGN
R-N-GF-11/012	REAL ESTATE - RIVERSIDE PARK	CN164005.DGN
R-N-GF-11/013	REAL ESTATE - VALLEY GOLF COURSE - FAIRWAY 2	CN164006.DGN
R-N-GF-11/014	REAL ESTATE - VALLEY GOLF COURSE - TEE 18	CN164007.DGN
R-N-GF-11/015	REAL ESTATE - RIVERSIDE DAM - EAST BANK	CN164008.DGN
R-N-GF-11/016	REAL ESTATE - VALLEY GOLF COURSE - FAIRWAY 16	CN164009.DGN
R-N-GF-11/017	REAL ESTATE - VALLEY GOLF COURSE - FAIRWAY 15	CN164010.DGN
R-N-GF-11/018	REAL ESTATE - DATA SETS	CN164011.DGN

GENERAL CROSS-REFERENCING SYMBOLS

SECTION/DETAIL — A
SUPPLEMENTAL INFORMATION
SCALE: X/X" = 1'-0"
SECTION/DETAIL TITLE ON SAME DRAWING (CENTERED UNDER SECTION/DETAIL)

SECTION/DETAIL — 2 / 99/999
SUPPLEMENTAL INFORMATION
SCALE: X/X" = 1'-0"
SECTION/DETAIL TITLE ON ANOTHER DRAWING (CENTERED UNDER SECTION/DETAIL)

TOP FRONT SIDE
ELEVATION SECTION
VIEW SUBTITLE (CENTERED UNDER EACH VIEW)

2 — SECTION CUT W/ VIEW SHOWN ON SAME DRAWING

2 / 99/999 — SECTION CUT W/ VIEW SHOWN ON ANOTHER DRAWING

A — DETAIL SYMBOL W/ VIEW SHOWN ON SAME DRAWING

A / 99/999 — DETAIL SYMBOL W/ VIEW SHOWN ON ANOTHER DRAWING

ABBREVIATIONS

ALT. W/	ALTERNATE WITH	GALV.	GALVANIZED
ALUM.	ALUMINUM	I.F.	INSIDE FACE
BOT.	BOTTOM	LG.	LONG
CL.	CLEAR COVER	MAX.	MAXIMUM
C.J.	CONSTRUCTION JOINT	MIN.	MINIMUM
CMP	CORRUGATED METAL PIPE	N.F.	NEAR FACE
CONC.	CONCRETE	O.F.	OUTSIDE FACE
CONT. JT.	CONTRACTION JOINT	O.C.	ON CENTER
CSP	CORRUGATED STEEL PIPE	RCP	STAINLESS STEEL
DIA.	DIAMETER	S.S.	REINFORCED CONCRETE PIPE
E.F.	EACH FACE	T & B	TOP AND BOTTOM
E.J.	EXPANSION JOINT	TYP.	TYPICAL
EL.	ELEVATION	U.N.O.	UNLESS NOTED OTHERWISE
E.W.	EACH WAY	VCP	VETRIFIED CLAY PIPE
F.F.	FAR FACE		

GENERAL LEGEND

BORING LOCATION
PROJECT ALIGNMENT POINT
BENCH MARK
CONTROL POINT
TREE REMOVAL
BOULDERS (SECTION VIEW)
RIPRAP (SECTION VIEW)
WATER SURFACE
64/004 — PLAN VIEW SHOWN ON ANOTHER DRAWING (NUMBER INDICATES DRAWING NUMBER WHERE PLAN IS FOUND)
BOULDERS (PLAN VIEW)
SIGN LOCATION

LIMITS OF WORK
FILL
CUT
RIPRAP (PLAN VIEW)
EXISTING STORM SEWER
EXISTING SANITARY SEWER
NEW STORM SEWER
EXISTING WATER LINE
NEW SANITARY SEWER

NOTES:

1. TIE DIAGRAMS AND DETAILS DESCRIPTIONS OF HORIZONTAL AND VERTICAL CONTROL POINTS ARE AVAILABLE FROM THE ST. PAUL DISTRICT OFFICE (651) 290-5596.
2. ORIGINAL DATA COMPILED NAD 83 US FOOT.
3. ELEVATION REFER TO M.S.L. (1929 ADJ.).
4. GRAND FORKS ORIGINAL DATA FROM 1994 AERIAL PHOTOGRAPHY.
5. EAST GRAND FORKS ORIGINAL DATA FROM 1997 AERIAL PHOTOGRAPHY.
6. ORIGINAL SOUNDING DATA FROM 1998 SOUNDINGS.
7. THE INFORMATION ON THESE DRAWINGS CONCERNING TYPE AND LOCATION OF UTILITIES MAY NOT BE ACCURATE OR ALL INCLUSIVE. THE CONTRACTOR IS RESPONSIBLE FOR MAKING THE DETERMINATION AS TO THE TYPE AND LOCATION OF UTILITIES AS MAY BE NECESSARY TO AVOID DAMAGE TO THESE UTILITIES.
8. COORDINATES BASED ON NORTH DAKOTA STATE PLANE GRID SYSTEM, NORTH ZONE.

HORIZONTAL CONTROL MONUMENTS

HV17 EAST GRAND FORKS, MINNESOTA, REBAR APPROXIMATELY 20' SOUTH OF PARK BENCH WITH CONCRETE SUPPORTS NEAR FORK IN THE ASPHALT GOLF TRAIL OF VALLEY VIEW GOLF COURSE.
Y=365,479.95053 X=2,812,649.15321

HV18 GRAND FORKS, NORTH DAKOTA, APPROXIMATELY 80' SOUTH-EAST OF CENTER CONTROL VALVE EAST OF GRAVEL ACCESS ROAD TO RDO FOODS.REBAR IS 2.28' SOUTHEAST OF MOSTLY SOUTHERN OVERHEAD POWER POLE AND 45.57' SOUTHWEST OF THE GUIDE WIRE ANCHORS.
Y=363,390.63568 X=2,812,361.65122

VERTICAL CONTROL MONUMENTS

TBM 'Q' RIVERSIDE DAM, NORTH DAKOTA, CHISELED 'X' LEFT BANK DAM ABUTMENT, UPSTREAM RIVERSIDE CORNER. ELEV = 800.20

TBM 'QR' RIVERSIDE DAM, NORTH DAKOTA, CHISELED 'X' RIGHT BANK DAM ABUTMENT, UPSTREAM RIVERSIDE CORNER. ELEV = 800.13

US Army Corps of Engineers
St. Paul District

Symbol	Description	Date	Appr.
	AS-BUILT AS OF DECEMBER 2001		

DESIGNED: CAA
CHECKED: RGB
ED-D
DRAWN: CAA
DESIGNED:
CHECKED:
ED-H

SCALE:
DATE: MAR 2000
CADD FILE NAME: GA000002.DGN
SOLICITATION NO.: DACW37-00-B-0003
AE APPROVING OFFICIAL:

DEPARTMENT OF THE ARMY
ST PAUL, MINNESOTA
CORPS OF ENGINEERS
ST. PAUL DISTRICT

BANK STABILIZATION RIVERSIDE DAM
DRAWING INDEX & LEGEND

DRAWING NUMBER:
R-P-GF-00/002
SHT 2 OF 20

AS-BUILT

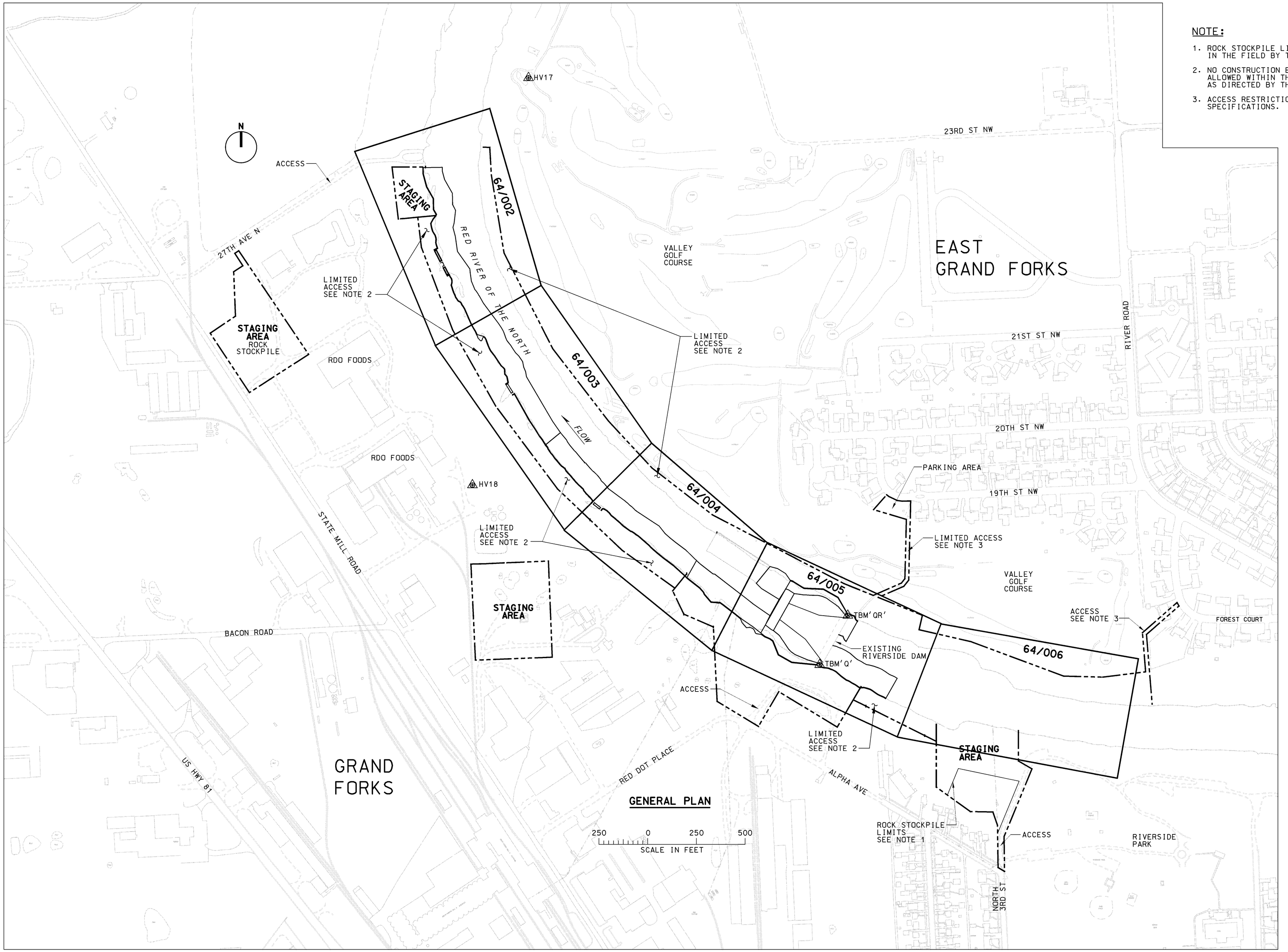

GENERAL PLAN

NOTE:

1. ROCK STOCKPILE LIMITS SHALL BE ESTABLISHED IN THE FIELD BY THE CONTRACTING OFFICER.
2. NO CONSTRUCTION EQUIPMENT OR VEHICLES ALLOWED WITHIN THE LIMITS OF WORK EXCEPT AS DIRECTED BY THE CONTRACTING OFFICER.
3. ACCESS RESTRICTIONS ARE DEFINED IN THE SPECIFICATIONS.

US Army Corps of Engineers
St. Paul District

Symbol	Description	Date	Appr.
	AS-BUILT AS OF DECEMBER 2001		

DESIGNED: CAA
CHECKED: RGB
DRAWN: CAA
DESIGNED:
CHECKED:
SCALE:
DATE: MAR 2000
CADD FILE NAME: SOL1003.DGN
SOL NO.: DACW37-00-B-0003
AE APPROVING OFFICIAL:

DEPARTMENT OF THE ARMY
ST. PAUL, MINNESOTA
CORPS OF ENGINEERS
ST. PAUL DISTRICT

BANK STABILIZATION RIVERSIDE DAM
FLOOD CONTROL
GENERAL MAP

DRAWING NUMBER:
R-P-GF-10/003

SHT 3 OF 20

AS-BUILT

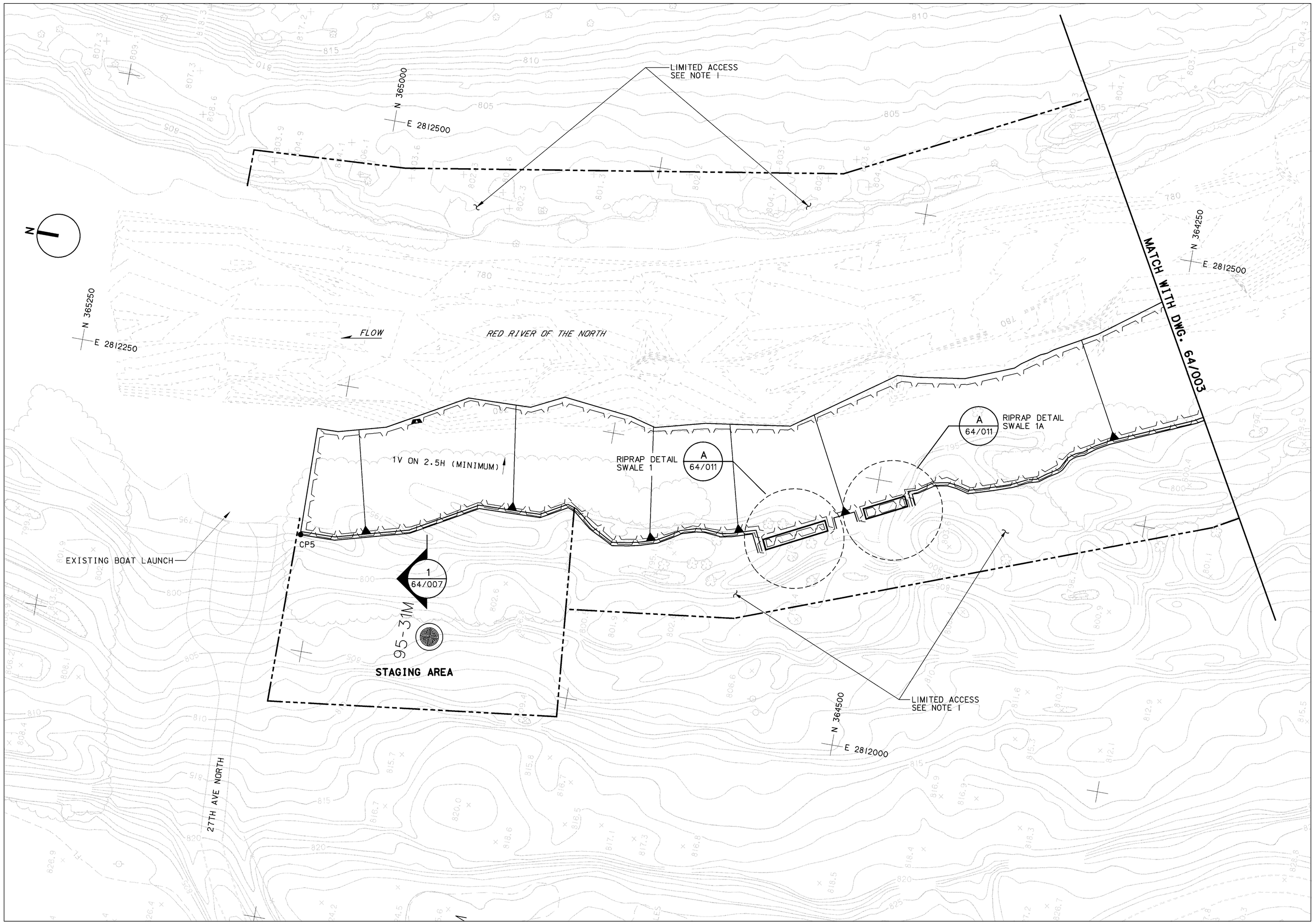

PLAN

50 0 50 100
SCALE IN FEET

REFERENCE
1. BORING LOGS

DWG. NO.
10/004 –
10/006

NOTES:
1. NO CONSTRUCTION EQUIPMENT OR VEHICLES ALLOWED WITHIN THE LIMITS OF WORK EXCEPT AS DIRECTED BY THE CONTRACTING OFFICER.

ID	NORTHING	EASTING
CP5	365019.372	2812106.792

US Army Corps of Engineers
St. Paul District

Symbol	Description	Date	Appr.
	AS-BUILT AS OF DECEMBER 2001		

DESIGNED: CAA/CWB
CHECKED: RGB/DWR
DRAWN: CAA
DESIGNED: MEL
CHECKED: MDL
SCALE:
DATE: MAR 2000
CADD FILE NAME: G016-002.DGN
CONTRACT NO. DACW37-00-B-0003
AE APPROVING OFFICIAL:

DEPARTMENT OF THE ARMY
ST. PAUL, MINNESOTA
CORPS OF ENGINEERS
ST. PAUL DISTRICT

BANK STABILIZATION RIVERSIDE DAM
FLOOD CONTROL
PLAN
BOAT LAUNCH

DRAWING NUMBER:
R-P-GF-64/002
SHT 4 OF 20

AS-BUILT

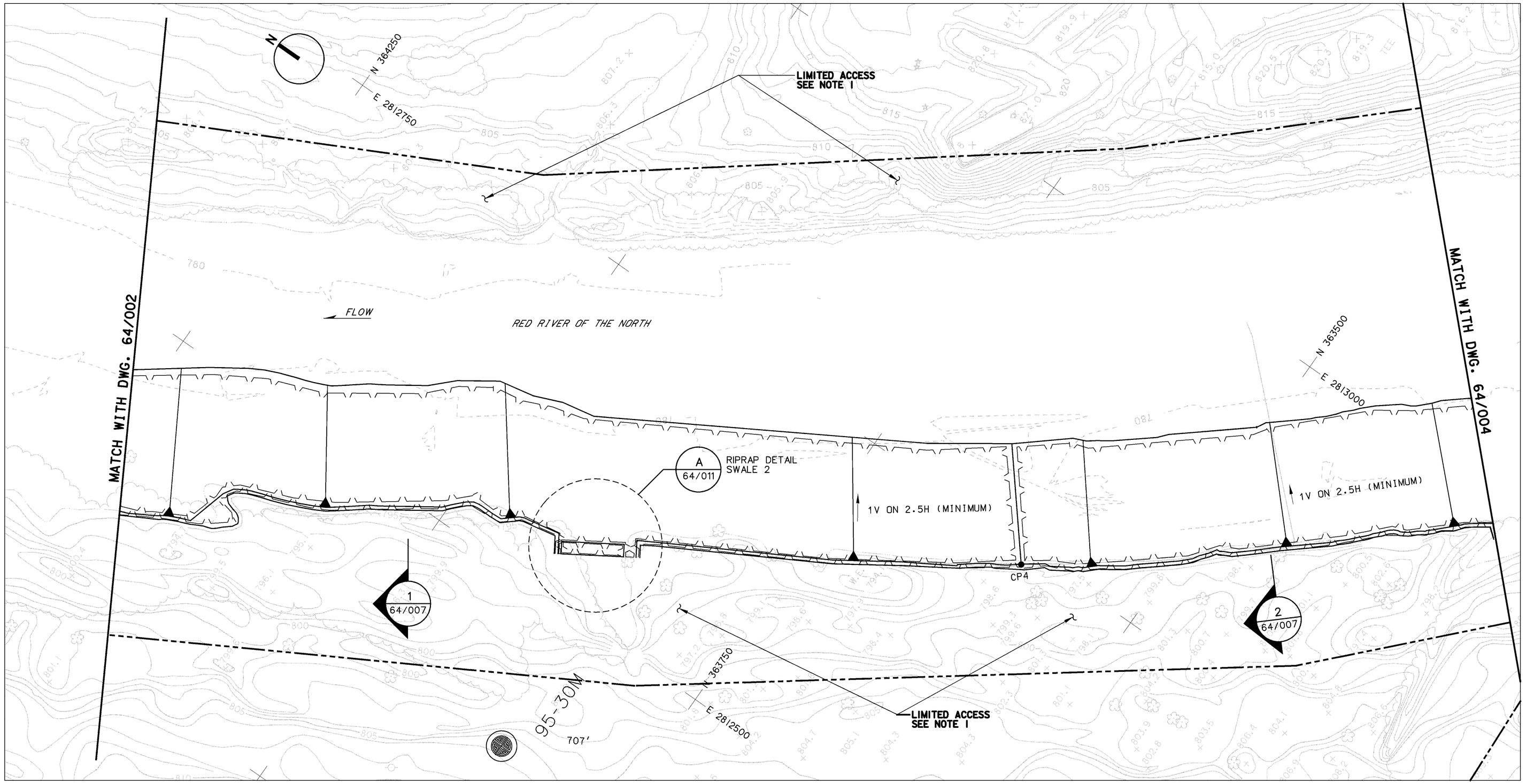

PLAN

50 0 50 100
SCALE IN FEET

REFERENCE
1. BORING LOGS

DWG. NO.
10/004 –
10/006

NOTES:
1. NO CONSTRUCTION EQUIPMENT OR VEHICLES ALLOWED WITHIN THE LIMITS OF WORK EXCEPT AS DIRECTED BY THE CONTRACTING OFFICER.

ID	NORTHING	EASTING
CP4	363598.395	2812738.049

US Army Corps of Engineers
St. Paul District

Symbol	Description	Date	Appr.
	AS-BUILT AS OF DECEMBER 2001		

DESIGNED: CAA/CWB
CHECKED: RBG/DWR
DRAWN: CAA
DESIGNED: WEJ
CHECKED: MDL
SCALE:
DATE: MAR 2000
CADD FILE NAME: 5016400 3.DGN
CONTRACT NO. DACW37-00-B-0003
APPROVING OFFICIAL: AE

DEPARTMENT OF THE ARMY
ST. PAUL, MINNESOTA
CORPS OF ENGINEERS
ST. PAUL DISTRICT

BANK STABILIZATION RIVERSIDE DAM
FLOOD CONTROL
PLAN
RDO FOODS

DRAWING NUMBER:
R-P-GF-64/003

SHT 5 OF 20

AS-BUILT

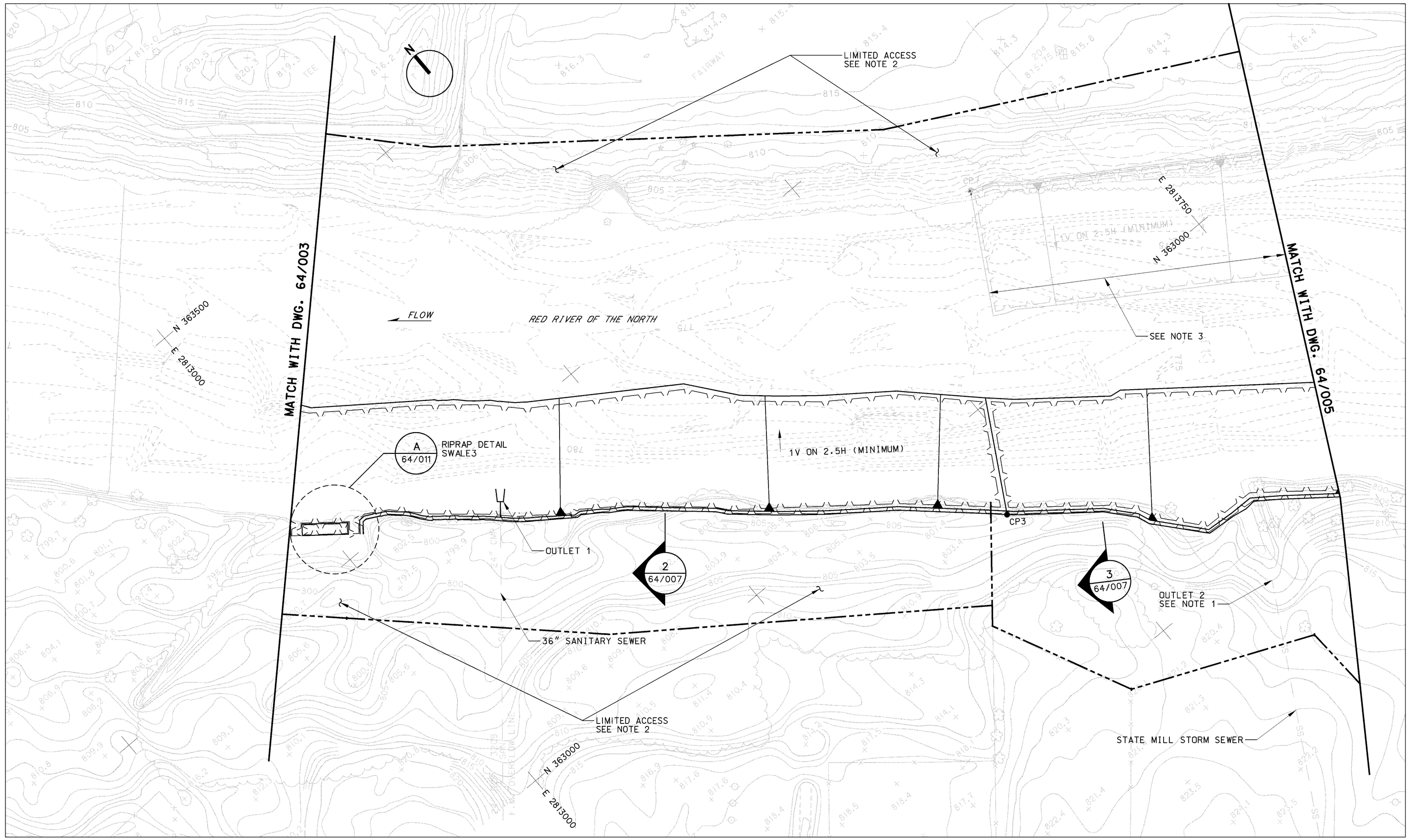

PLAN

50 0 50 100
SCALE IN FEET

NOTES:

1. THERE IS NO WORK TO BE DONE TO OUTLET 2.
2. NO CONSTRUCTION EQUIPMENT OR VEHICLES ALLOWED WITHIN THE LIMITS OF WORK EXCEPT AS DIRECTED BY THE CONTRACTING OFFICER.
3. THE RIPRAP IN THIS REACH WAS PLACED UNDER THE PEDESTRIAN BRIDGES CONTRACT. SEE THE PEDESTRIAN BRIDGES AS-BUILT DRAWINGS FOR DETAILS.

REFERENCE	DWG.NO.
1. PIPE PROFILE	64/012
2. SEWER OUTLET HEADWALL	64/014

ID	NORTHING	EASTING
CP3	362914.102	2813460.880
CP7	363149.516	2813617.244

US Army Corps of Engineers
St. Paul District

Symbol	Description	Date	Appr.
	AS-BUILT AS OF DECEMBER 2001		

DESIGNED: CAA/CWB
CHECKED: RGB/DWR
DRAWN: CAA
DESIGNED: MEL
CHECKED: MDL
SCALE:
DATE: MAR 2000
CADD FILE NAME: SOI64004.DGN
SOLICITATION NO. DACW37-00-B-0003
AE APPROVING OFFICIAL:

DEPARTMENT OF THE ARMY
ST. PAUL, MINNESOTA
CORPS OF ENGINEERS
ST. PAUL DISTRICT

BANK STABILIZATION RIVERSIDE DAM
FLOOD CONTROL
PLAN
DOWNSTREAM OF RIVERSIDE DAM

DRAWING NUMBER:
R-P-GF-64/004

SHT 6 OF 20

AS-BUILT

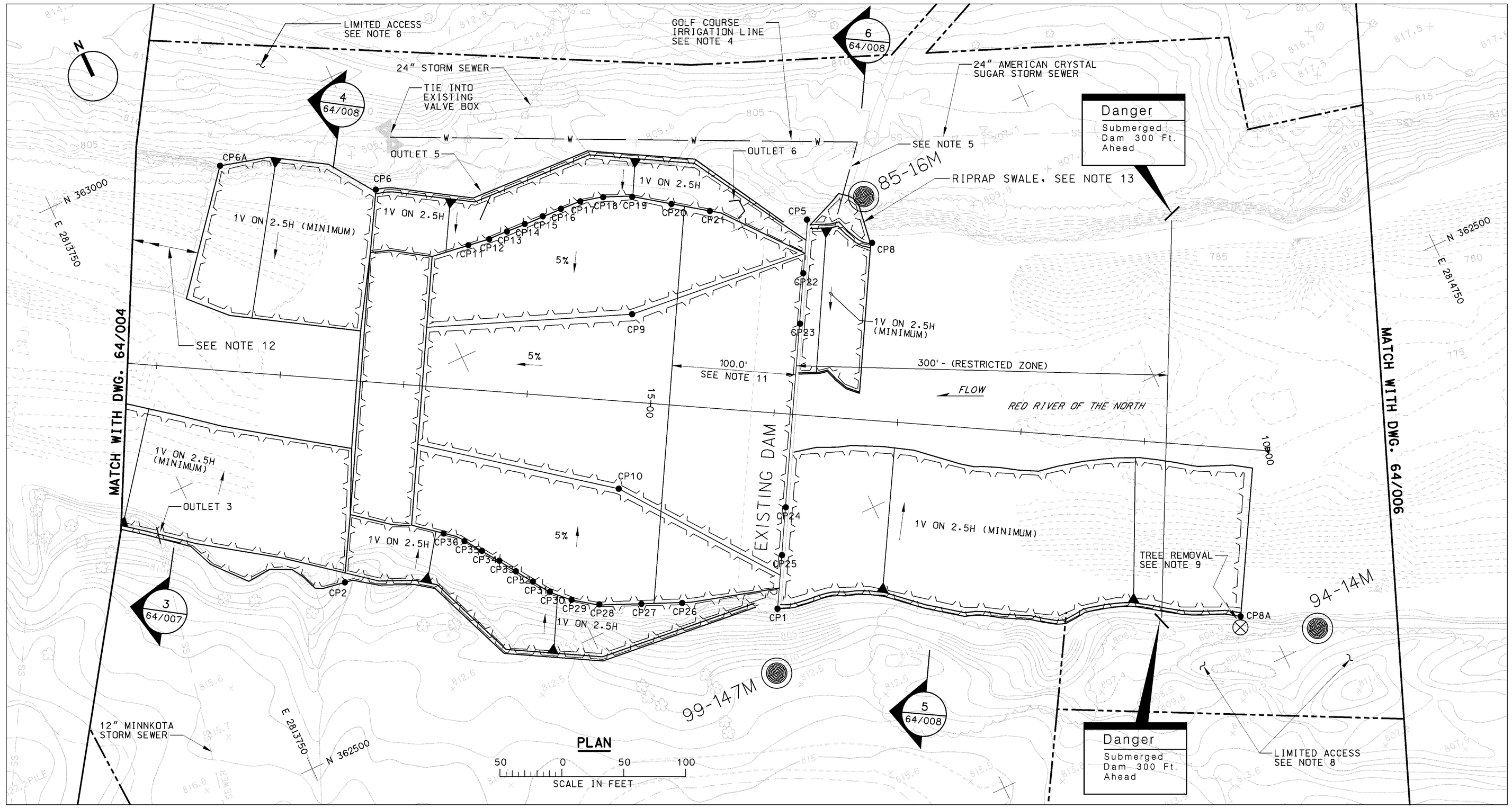

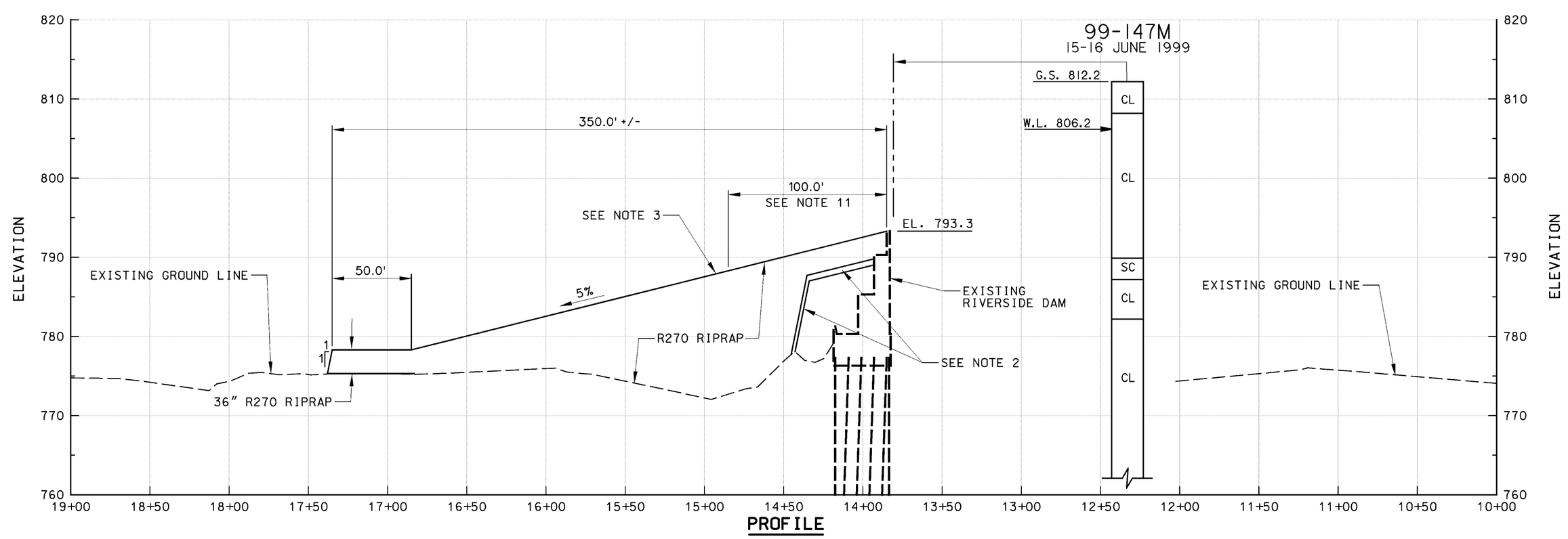

NOTES:

1. STATIONING SHOWN IS REPRESENTATIVE OF THE ALIGNMENT FOR THE ORIGINAL CONSTRUCTION OF THE DAM. IT IS SHOWN FOR VISUAL REFERENCE ONLY.
2. SEE SECTION A OF DWG. 64/015 FOR DETAILS NEAR THE EXISTING DAM.
3. BOULDERS NOT SHOWN IN PLAN OR PROFILE FOR CLARITY.
4. APPROXIMATE LOCATION OF TEMPORARY PVC. REMOVE TEMPORARY PVC AND INSTALL 400 L.F. NEW 6" PVC PIPE. SLOPE TO DRAIN RIVERWARD.
5. ENCASE RIVERWARD 50 L.F. OF 6" PVC PIPE WITH 12" RCP.
6. CONCRETE DEBRIS DOWNSTREAM OF DAM TO REMAIN.
7. ABANDON EXPOSED EXISTING 6" PVC ALONG THE EAST BANK DOWNSTREAM OF THE DAM.
8. NO CONSTRUCTION EQUIPMENT OR VEHICLES ALLOWED WITHIN THE LIMITS OF WORK EXCEPT AS DIRECTED BY CONTRACTING OFFICER.
9. REMOVE UNDERCUT STANDING TREE ABOVE THE RIPRAP BANK PROTECTION IDENTIFIED BY THE CONTRACTING OFFICER.
10. APPROXIMATE LOCATION OF SIGNS IS SHOWN. LOCATION TO BE DETERMINED BY THE CONTRACTING OFFICER.
11. CHINK R270 RIPRAP SURFACE WITH BEDDING FLUSH INTO PLACE UNTIL A RELATIVELY SMOOTH SURFACE IS ACHIEVED.
12. THE RIPRAP IN THIS REACH WAS PLACED UNDER THE PEDESTRIAN BRIDGES CONTRACT. SEE THE PEDESTRIAN BRIDGES AS-BUILT DRAWINGS FOR DETAILS.
13. ARMOR SWALE WITH 18" R20 RIPRAP FROM CP5 & CP8 TO EL. 805.0.

REFERENCES:

	DWG.NO.
1. RIVERSIDE DAM - PLAN VIEW	64/009
2. PIPE PROFILE	64/012 - 64/013
3. SEWER OUTLET HEADWALL	64/014
4. RIVERSIDE DAM MODIFICATIONS	64/015
5. BORING LOGS	10/004 - 10/006

ID	NORTHING	EASTING
CP1	362458.335	2814145.112
CP2	362625.220	2813837.480
CP5	362733.092	2814299.427
CP6	362902.245	2813994.158
CP8	362693.839	2814339.213
CP6A	362972.827	2813888.169
CP8A	362294.581	2814481.485

DOWNSTREAM OF RIVERSIDE DAM

ID	NORTHING	EASTING	ELEV TOP OF RIPRAP	ELEV TOP OF BOULDER
CP9	362723.543	2814139.267	786.5	
CP10	362600.375	2814069.894	786.5	
CP11	362829.927	2814042.986	783.3	787.3
CP12	362827.241	2814060.347	784.3	788.3
CP13	362826.762	2814075.893	785.3	789.3
CP14	362826.282	2814091.440	786.3	790.3
CP15	362825.635	2814107.276	787.3	791.3
CP16	362824.989	2814123.112	788.3	792.3
CP17	362823.840	2814139.817	789.3	793.3
CP18	362819.161	2814157.956	790.3	794.3
CP19	362809.490	2814179.388	791.3	795.3
CP20	362790.840	2814205.671	792.0	796.0
CP21	362772.524	2814231.375	792.7	796.7
CP22	362695.096	2814278.526	793.3	793.3
CP23	362659.259	2814258.993	793.3	793.3
CP24	362529.785	2814185.785	793.3	793.3
CP25	362496.019	2814166.677	793.3	793.3
CP26	362495.065	2814077.359	792.7	796.7
CP27	362508.256	2814047.153	792.0	796.0
CP28	362522.239	2814016.245	791.3	795.3
CP29	362535.051	2813997.398	790.3	794.3
CP30	362548.420	2813984.276	789.3	793.3
CP31	362561.688	2813975.341	788.3	792.3
CP32	362574.957	2813966.407	787.3	791.3
CP33	362588.348	2813957.928	786.3	790.3
CP34	362601.494	2813948.537	785.3	789.3
CP35	362614.640	2813939.145	784.3	788.3
CP36	362627.385	2813926.435	783.3	787.3

US Army Corps of Engineers
St. Paul District

Symbol	Description	Date	Appr.
	AS-BUILT AS OF DECEMBER 2001		

DESIGNED: CAA/CWB
CHECKED: RGB/DWR
DRAWN: CAA
DESIGNED: MDL
CHECKED: MDL
SCALE:
DATE: MAR 2000
CADD FILE NAME: c0164005.DGN
SOLICITATION NO.: DACW37-00-B-0003
APPROVING OFFICIAL:

DEPARTMENT OF THE ARMY
ST. PAUL, MINNESOTA
CORPS OF ENGINEERS
ST. PAUL DISTRICT

BANK STABILIZATION RIVERSIDE DAM
FLOOD CONTROL
PLAN AND PROFILE
RIVERSIDE DAM

DRAWING NUMBER:
R-P-GF-64/005
SHT 7 OF 20

AS-BUILT

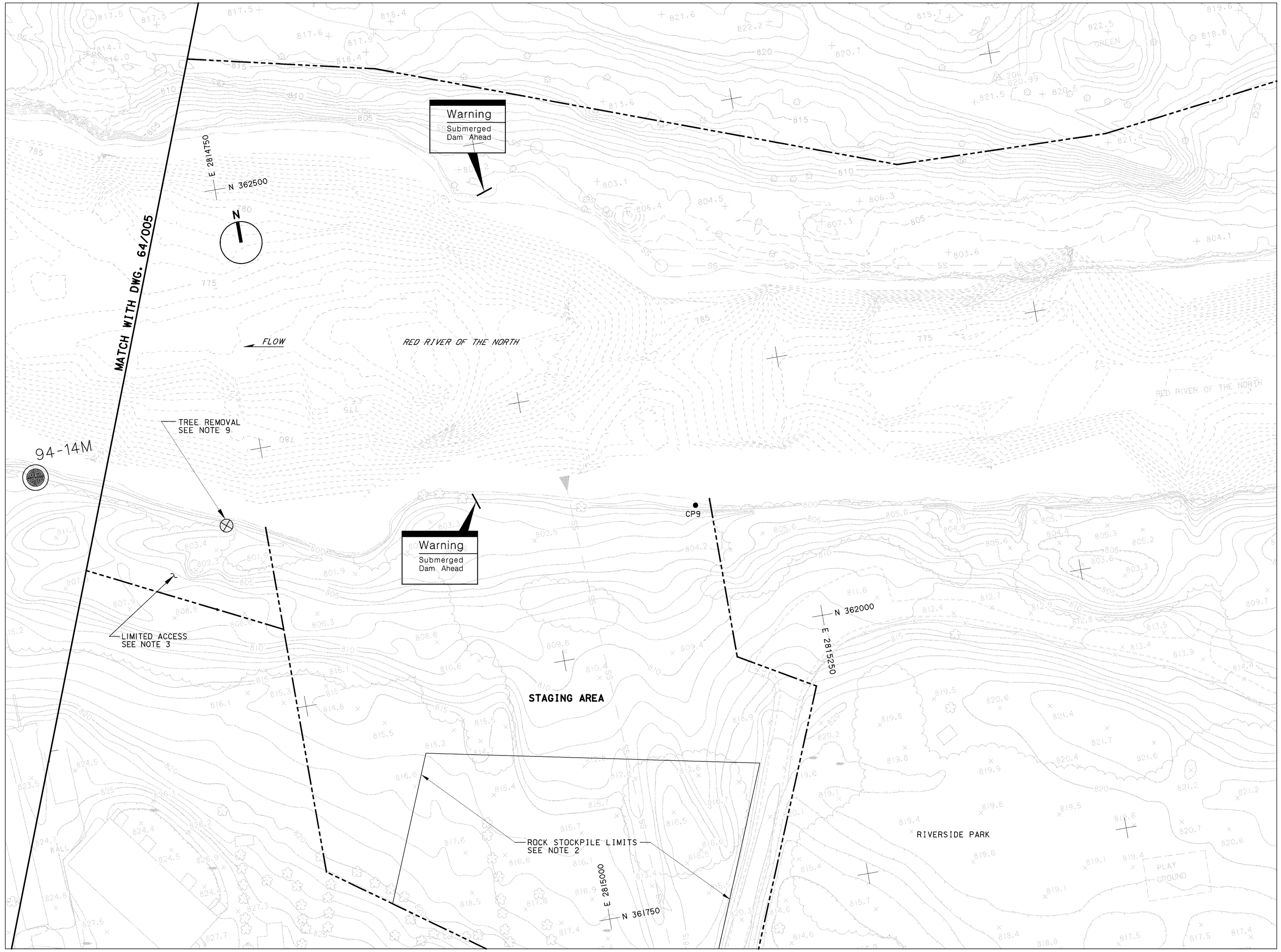

PLAN

50 0 50 100
SCALE IN FEET

NOTES:

1. THERE IS NO WORK TO BE DONE TO OUTLET 4.
2. ROCK STOCKPILE LIMITS SHALL BE ESTABLISHED IN THE FIELD BY THE CONTRACTING OFFICER.
3. NO CONSTRUCTION EQUIPMENT OR VEHICLES ALLOWED WITHIN THE LIMITS OF WORK EXCEPT AS DIRECTED BY THE CONTRACTING OFFICER.
4. REMOVE UNDERCUT STANDING TREE ABOVE THE RIPRAP BANK PROTECTION IDENTIFIED BY THE CONTRACTING OFFICER.
5. APPROXIMATE LOCATION OF SIGNS SHOWN. LOCATION WILL BE DETERMINED BY THE CONTRACTING OFFICER.

REFERENCE	DWG.NO.
1. BORING LOG	10/004 – 10/006

US Army Corps of Engineers
St. Paul District

Symbol	Description	Date	Appr.
	AS-BUILT AS OF DECEMBER 2001		

DESIGNED: CAA/CWB
CHECKED: RGB/DWR
DRAWN: CAA
DESIGNED: MDL
CHECKED: MDL
SCALE:
DATE: MAR 2000
CADD FILE NAME: G016-006.DGN
SOLICITATION NO.: DACW37-00-B-0003
AE APPROVING OFFICIAL:

DEPARTMENT OF THE ARMY
ST. PAUL, MINNESOTA
CORPS OF ENGINEERS
ST. PAUL DISTRICT

BANK STABILIZATION RIVERSIDE DAM
FLOOD CONTROL
PLAN
RIVERSIDE PARK

DRAWING NUMBER:
R-P-GF-64/006

SHT 8 OF 20

AS-BUILT

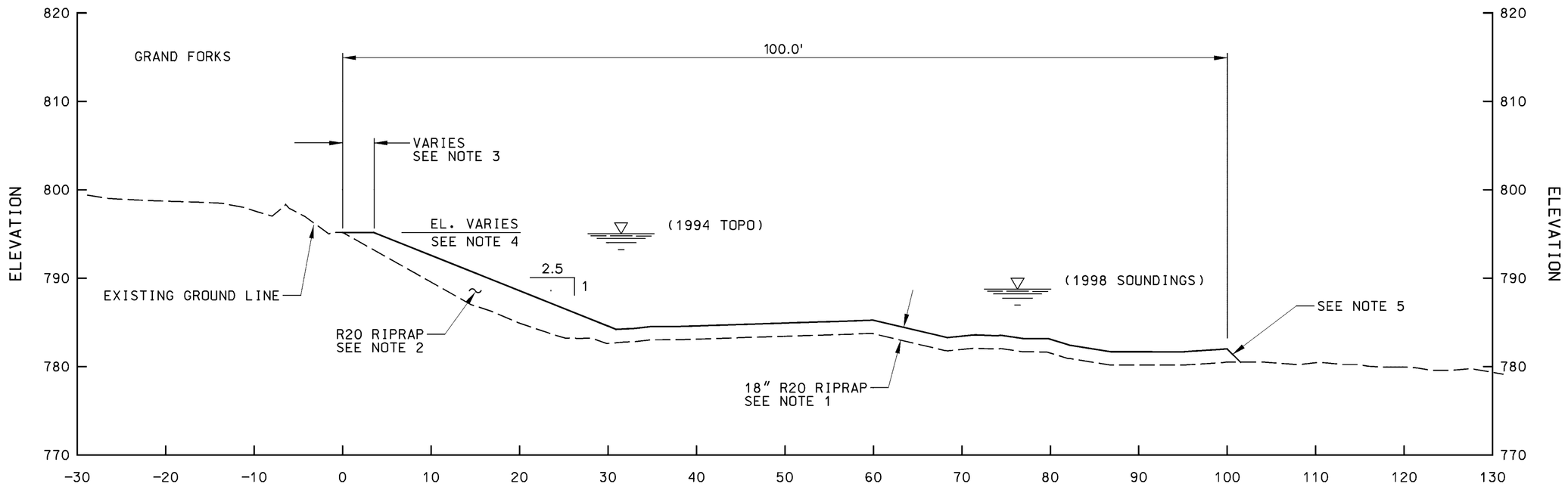

TYPICAL SECTION 1 (64/002, 64/003)
CP5 TO CP4

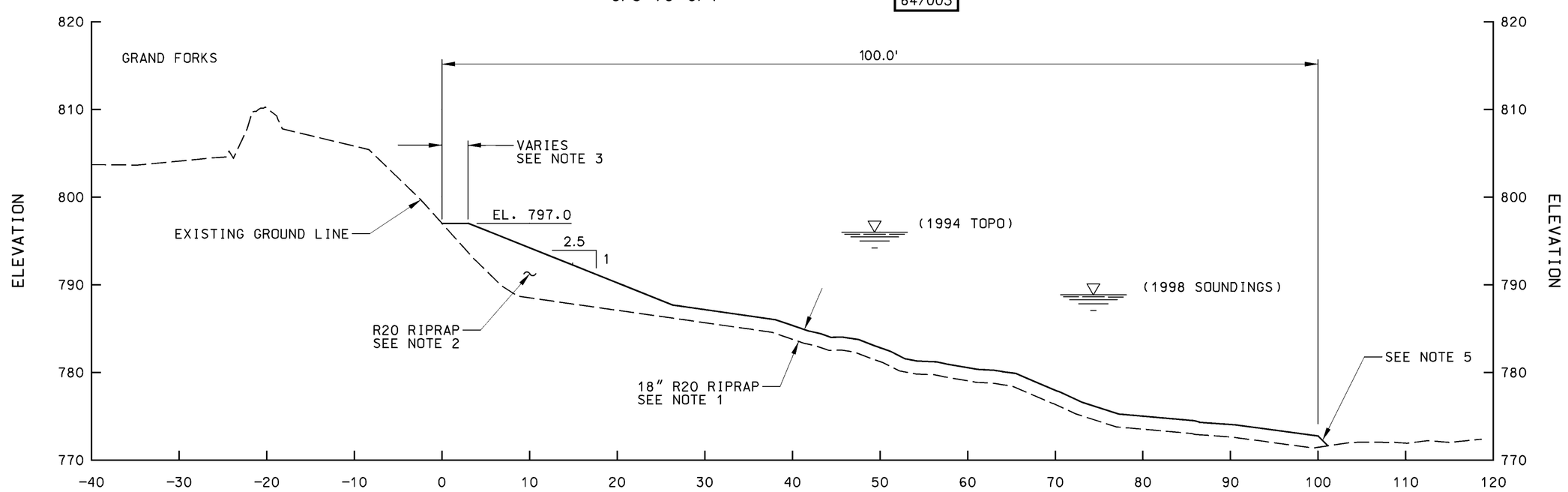

TYPICAL SECTION 2 (64/003, 64/004)
CP4 TO CP3

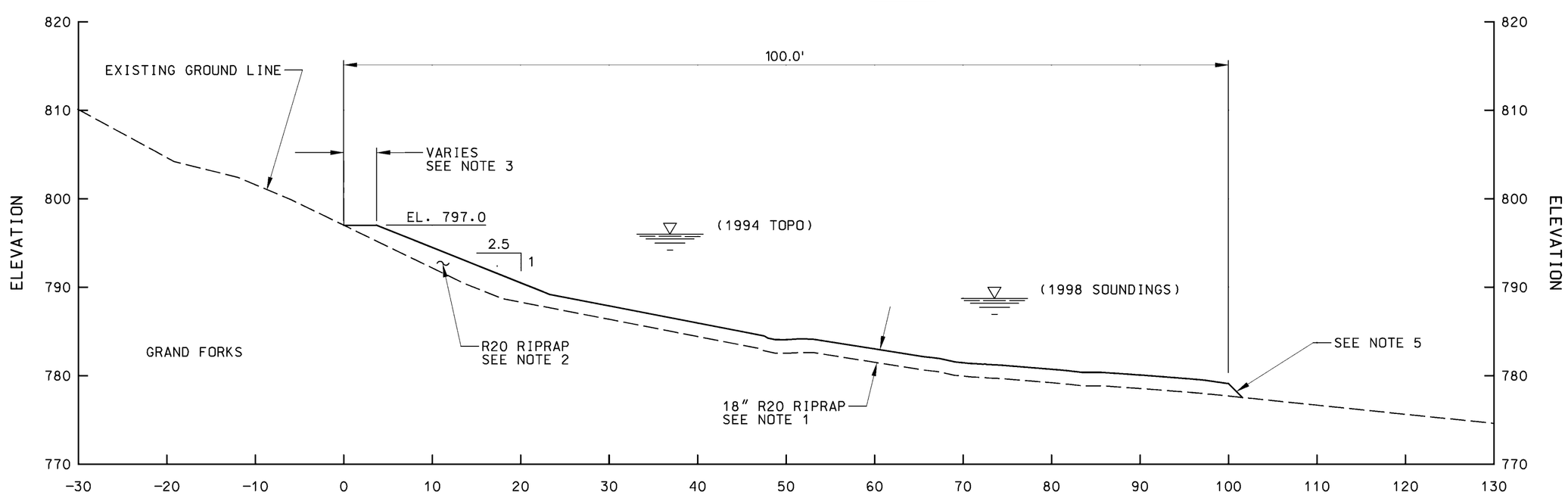

TYPICAL SECTION 3 (64/004, 64/005)
CP3 TO CP2

NOTES:

1. PLACE 18" THICK RIPRAP ON THE CHANNEL BOTTOM AND ON THE CHANNEL SIDE SLOPES WHICH ARE 1V ON 2.5H OR FLATTER.
2. FILL CHANNEL SIDE SLOPE AREAS WHICH ARE STEEPER THAN 1V ON 2.5H WITH RIPRAP TO FORM A 1V ON 2.5H SLOPE.
3. TOP WIDTH MAY VARY FROM 2' TO 4' TO FORM A UNIFORM AND CONTINUOUS BANK ALIGNMENT.
4. PLACE RIPRAP TO EL. 797.0 OR THE VEGETATION LINE AS DEFINED BY THE CONTRACTING OFFICER, WHICHEVER IS LOWER.
5. ANGLE OF REPOSE.

US Army Corps of Engineers
St. Paul District

Symbol	Description	Date	Appr.
	AS-BUILT AS OF DECEMBER 2001		

DESIGNED: CAA/CWB
SCALE:
DATE: MAR 2000
CHECKED: RGB/DWR
CADD FILE NAME: C03R4007.DGN
DRAWN: CAA
CONTRACT NO. DACW37-00-B-0003
DESIGNED: WEL
AE APPROVING OFFICIAL:
CHECKED: MDL
ED-D
ED-H

DEPARTMENT OF THE ARMY
ST. PAUL, MINNESOTA
CORPS OF ENGINEERS
ST. PAUL DISTRICT

BANK STABILIZATION RIVERSIDE DAM
FLOOD CONTROL
SECTIONS 1 - 3

DRAWING NUMBER:
R-P-GF-64/007
SHT 9 OF 20

AS-BUILT

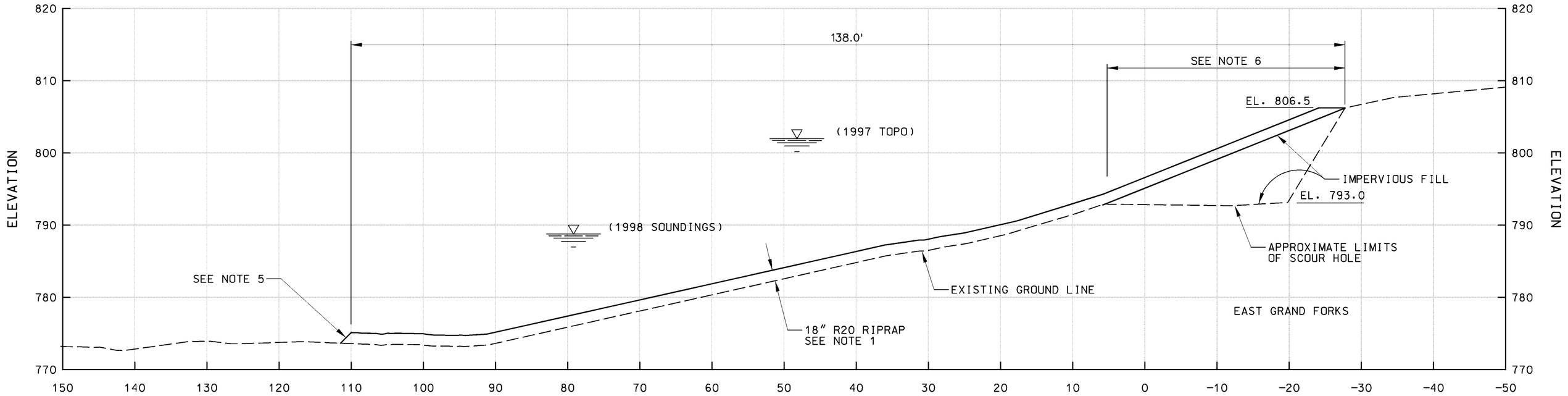

TYPICAL SECTION 4 / 64/005

CP6A TO CP6

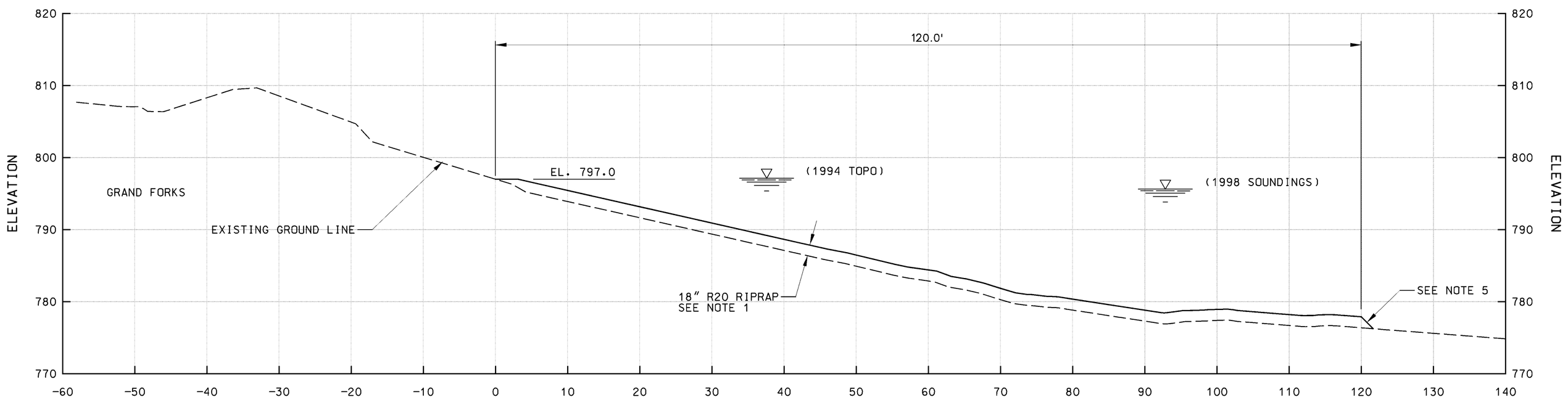

TYPICAL SECTION 5 / 64/005

CP1 TO CP8A

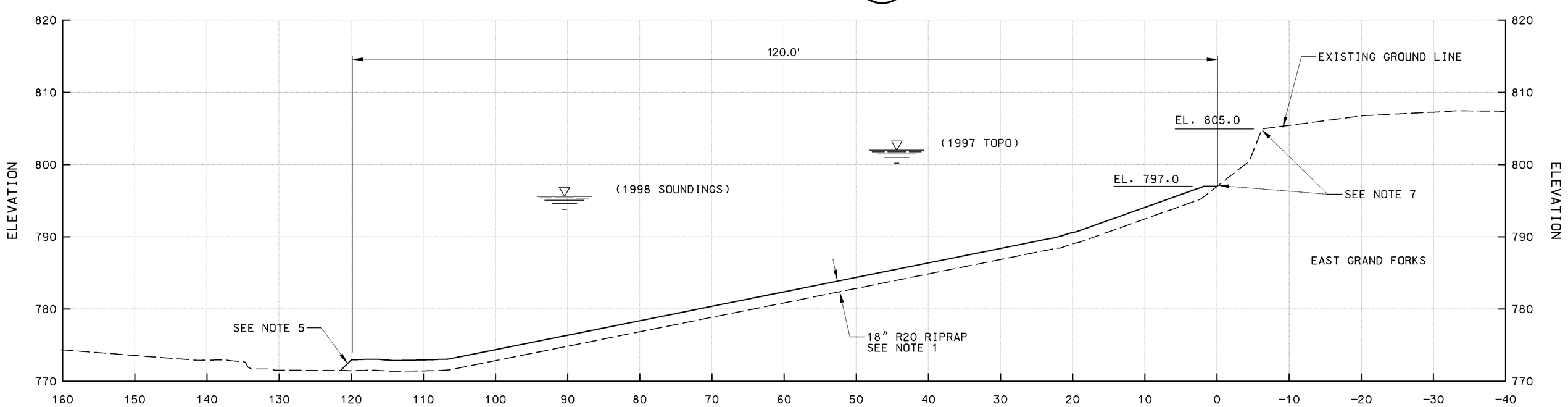

TYPICAL SECTION 6 / 64/005

CP5 TO CP8

NOTES:

1. PLACE 18" THICK RIPRAP ON THE CHANNEL BOTTOM AND ON THE CHANNEL SIDE SLOPES WHICH ARE 1V ON 2.5H OR FLATTER.
2. ~~FILL CHANNEL SIDE SLOPE AREAS WHICH ARE STEEPER THAN 1V ON 2.5H WITH RIPRAP TO FORM A 1V ON 2.5H SLOPE.~~
3. TOP WIDTH MAY VARY FROM 2' TO 4' TO FORM A UNIFORM AND CONTINUOUS BANK ALIGNMENT.
4. PLACE RIPRAP TO EL. 797.0 OR THE VEGETATION LINE AS DEFINED BY THE CONTRACTING OFFICER, WHICHEVER IS LOWER.
5. ANGLE OF REPOSE.
6. 18" R20 RIPRAP WAS PLACED ON IMPERVIOUS FILL TO FILL A SCOUR HOLE AND ARMOR THE BANK FROM EL. 793.0 TO EL. 806.5.
7. ARMOR SWALE WITH 18" R20 RIPRAP. SEE DWG. NO. 64/005.

US Army Corps of Engineers
St. Paul District

Symbol	Description	Date	Appr.
	AS-BUILT AS OF DECEMBER 2001		

DESIGNED: CAA/CWB
CHECKED: RGB/DWR
DRAWN: CAA
DESIGNED: MD
CHECKED: MDL
SCALE:
DATE: MAR 2000
CADD FILE NAME: ca364008.DGN
SOLICITATION NO.: DACW37-00-B-0003
AE APPROVING OFFICIAL:

DEPARTMENT OF THE ARMY
ST. PAUL, MINNESOTA
CORPS OF ENGINEERS
ST. PAUL DISTRICT

BANK STABILIZATION RIVERSIDE DAM
FLOOD CONTROL
SECTIONS 4 - 6

DRAWING NUMBER:
R-P-GF-64/008

SHT 10 OF 20

AS-BUILT

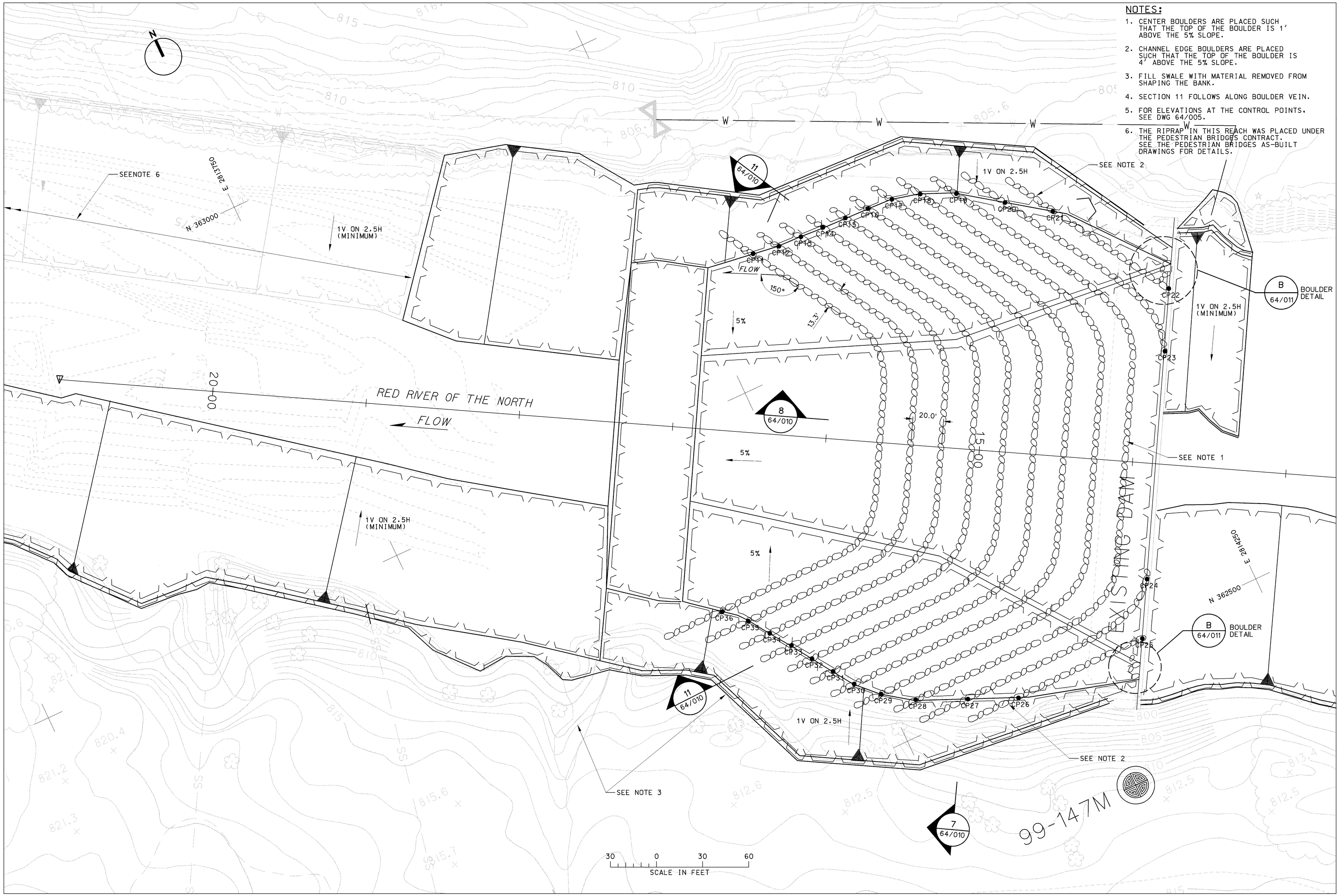

NOTES:

1. CENTER BOULDERS ARE PLACED SUCH THAT THE TOP OF THE BOULDER IS 1' ABOVE THE 5% SLOPE.
2. CHANNEL EDGE BOULDERS ARE PLACED SUCH THAT THE TOP OF THE BOULDER IS 4' ABOVE THE 5% SLOPE.
3. FILL SWALE WITH MATERIAL REMOVED FROM SHAPING THE BANK.
4. SECTION 11 FOLLOWS ALONG BOULDER VEIN.
5. FOR ELEVATIONS AT THE CONTROL POINTS, SEE DWG 64/005.
6. THE RIPRAP IN THIS REACH WAS PLACED UNDER THE PEDESTRIAN BRIDGES CONTRACT. SEE THE PEDESTRIAN BRIDGES AS-BUILT DRAWINGS FOR DETAILS.

US Army Corps of Engineers
St. Paul District

Symbol	Description	Date	Appr.
	AS-BUILT AS OF DECEMBER 2001		

DESIGNED: CAA/CMB
CHECKED: RGB/DWR
DRAWN: CAA
DESIGNED: MDL
CHECKED: MDL
SCALE:
DATE: MAR 2000
CADD FILE NAME: c0464009.DGN
CONTRACT NO. DACW37-00-B-0003
AE APPROVING OFFICIAL:
ED-D
ED-H

DEPARTMENT OF THE ARMY
ST. PAUL, MINNESOTA
CORPS OF ENGINEERS
ST. PAUL DISTRICT

BANK STABILIZATION RIVERSIDE DAM
FLOOD CONTROL
RIVERSIDE DAM
PLAN VIEW

DRAWING NUMBER:
R-P-GF-64/009

SHT 11 OF 20

AS-BUILT

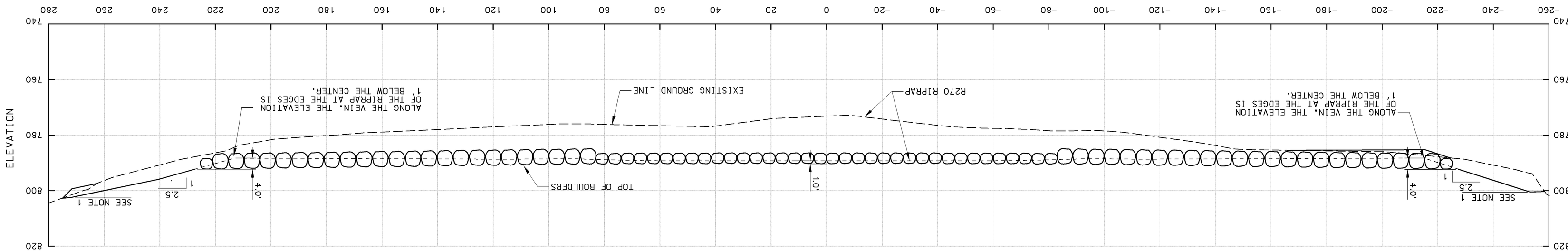

TYPICAL SECTION
BOULDER VEIN
11 64/009

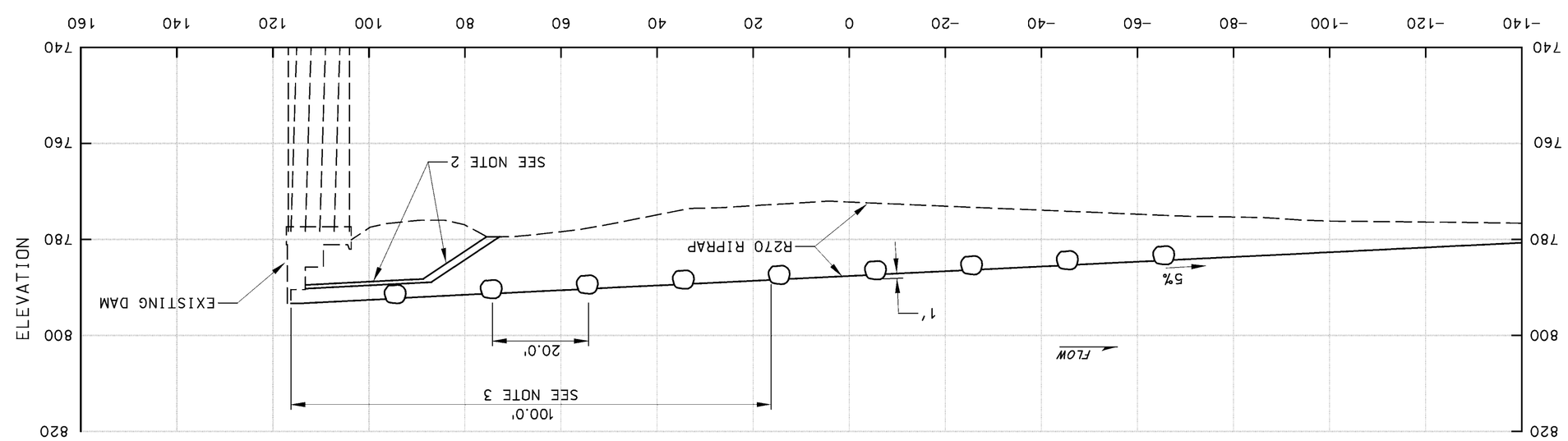

SECTION
8 64/009

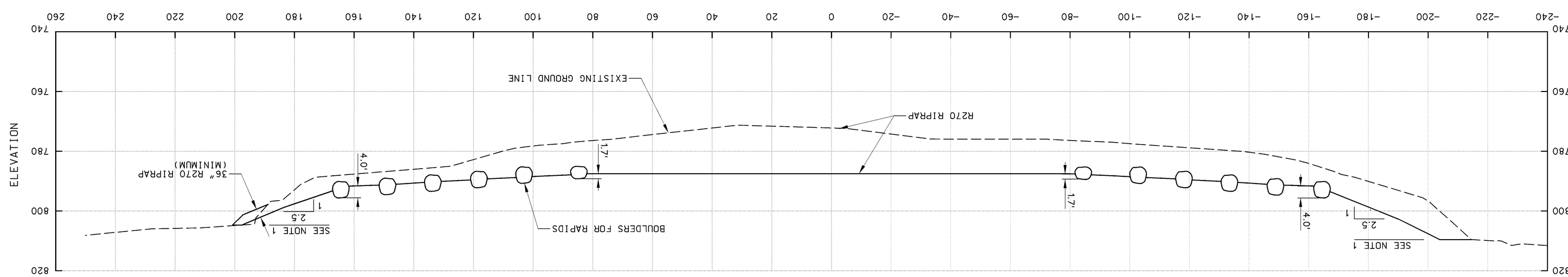

TYPICAL SECTION
DOWNSTREAM OF RIVERSIDE DAM
7 64/009

NOTES:

1. RIPRAP TO TOP OF BANK ABOUT 250' TO 300' DOWNSTREAM OF DAM AND THEN TIE INTO EL. 797.0.
2. SEE SECTION A OF DWG. 64/015 FOR DETAILS NEAR THE EXISTING DAM.
3. CHINK R270 RIPRAP SURFACE WITH BEDDING FLUSH INTO PLACE UNTIL A RELATIVELY SMOOTH SURFACE IS ACHIEVED.

US Army Corps of Engineers
St. Paul District

Symbol	Description	Date	Appr.
	AS-BUILT AS OF DECEMBER 2001		

BANK STABILIZATION RIVERSIDE DAM
FLOOD CONTROL
RIVERSIDE DAM
SECTION

DEPARTMENT OF THE ARMY
ST. PAUL, MINNESOTA
CORPS OF ENGINEERS
ST. PAUL DISTRICT

DESIGNED: CAA/CWB	ED-D	ED-H
CHECKED: RGB/DWR		
DRAWN: CAA		
DESIGNED: MES		
CHECKED: MDL		

SCALE:
DATE: MAR 2000
CADD FILE NAME: 5206640I0.DGN
SOLICITATION: DACW37-00-B-0003
AE APPROVING OFFICIAL:

DRAWING NUMBER: R-P-GF-64/010
SHT 12 OF 20

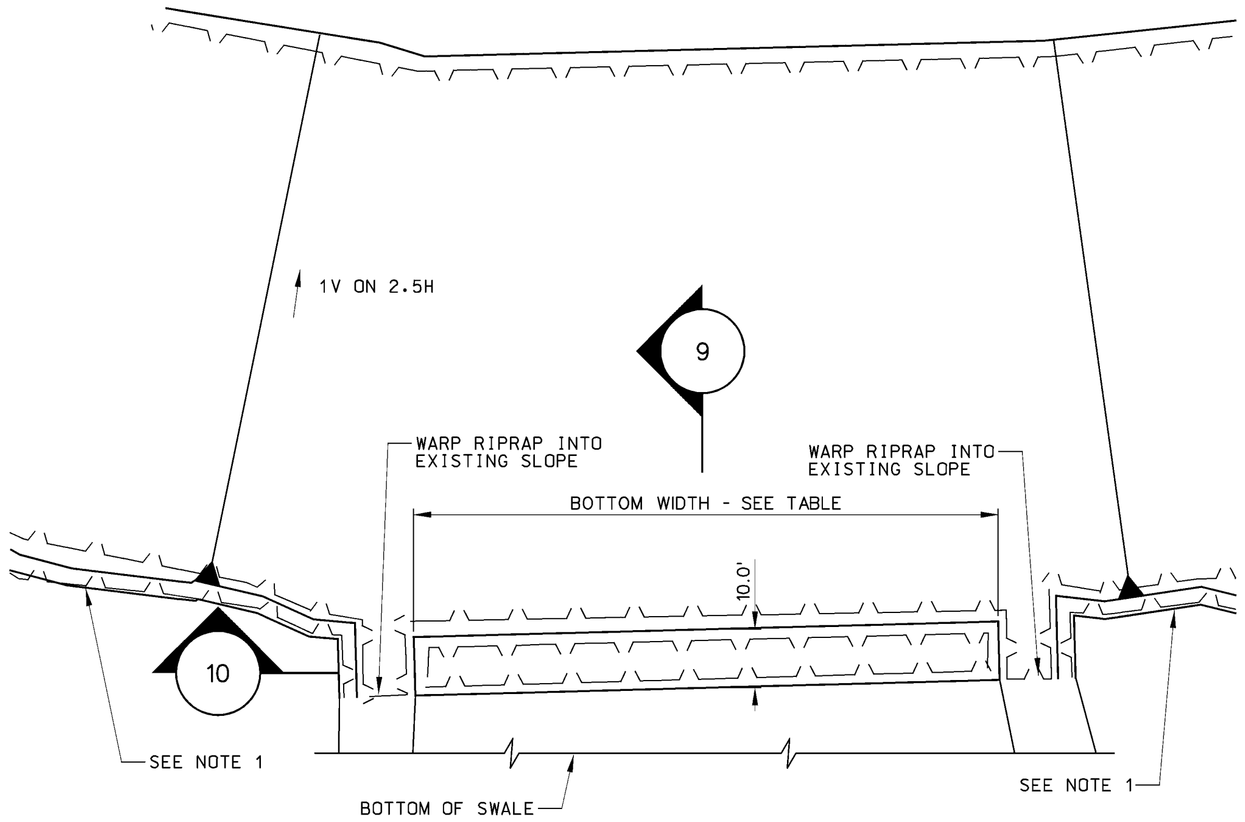

RIPRAP DETAIL
LOW SWALES
NOT TO SCALE

SWALE TABLE	
SWALE	BOTTOM WIDTH
1	60'
1A	40'
2	50'
3	40'

NOTES:

1. PLACE RIPRAP TO EL. 797.0 OR THE VEGETATION LINE AS DEFINED BY THE CONTRACTING OFFICER, WHICHEVER IS LOWER.
2. FILL CHANNEL SIDE SLOPE AREAS WHICH ARE STEEPER THAN 1V ON 2.5H WITH RIPRAP TO FORM A 1V ON 2.5H SLOPE.

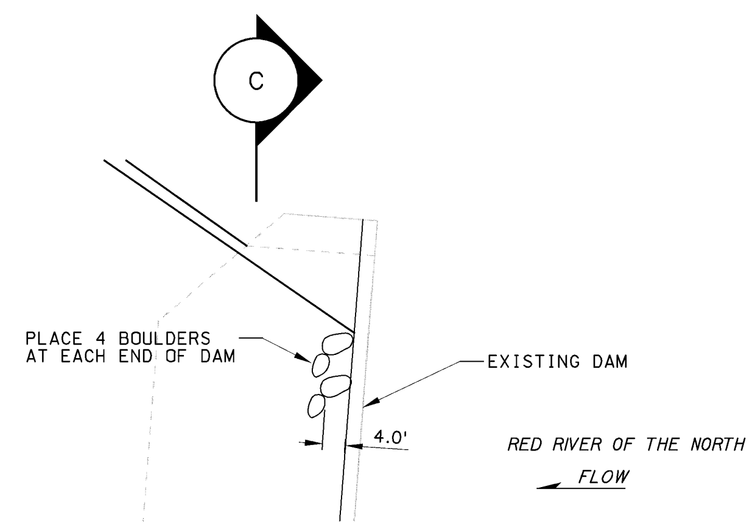

DETAIL
BOULDERS
NOT TO SCALE
B 64/009

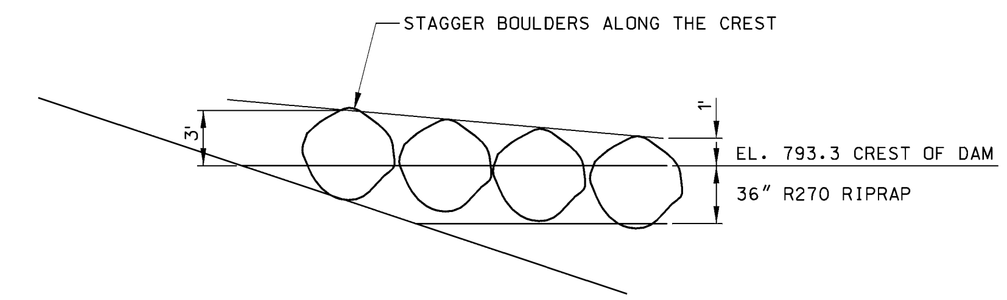

SECTION
BOULDERS
NOT TO SCALE
C

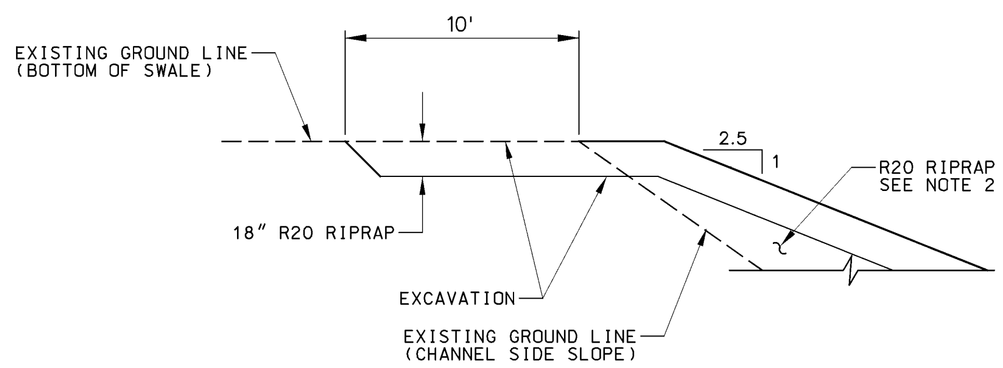

TYPICAL SECTION
CENTER OF SWALE
NOT TO SCALE
9

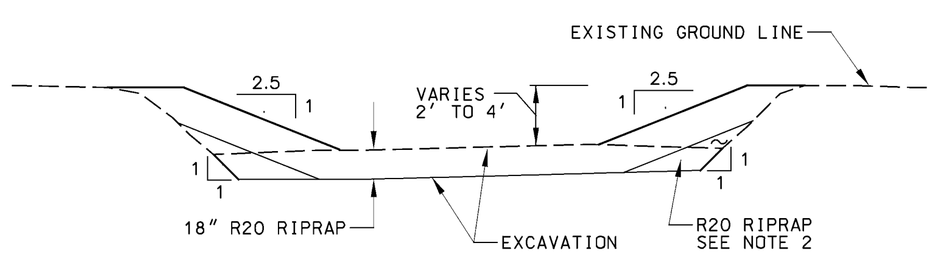

TYPICAL SECTION
CROSS THE SWALE
NOT TO SCALE
10

US Army Corps of Engineers
St. Paul District

Symbol	Description	Date	Appr.
	AS-BUILT AS OF DECEMBER 2001		

DESIGNED: CAA | SCALE: | DATE: MAR 2000
CHECKED: RGB | CADD FILE NAME: G05640T1.DGN
DRAWN: CAA | SOLICITATION NO.: DACW37-00-B-0003
DESIGNED: MDL | AE APPROVING OFFICIAL:
CHECKED: MDL

ED-D
ED-H

DEPARTMENT OF THE ARMY
ST PAUL, MINNESOTA
CORPS OF ENGINEERS
ST. PAUL DISTRICT

BANK STABILIZATION RIVERSIDE DAM
FLOOD CONTROL
RIPRAP DETAILS

DRAWING NUMBER:
R-P-GF-64/011
SHT 13 OF 20

AS-BUILT

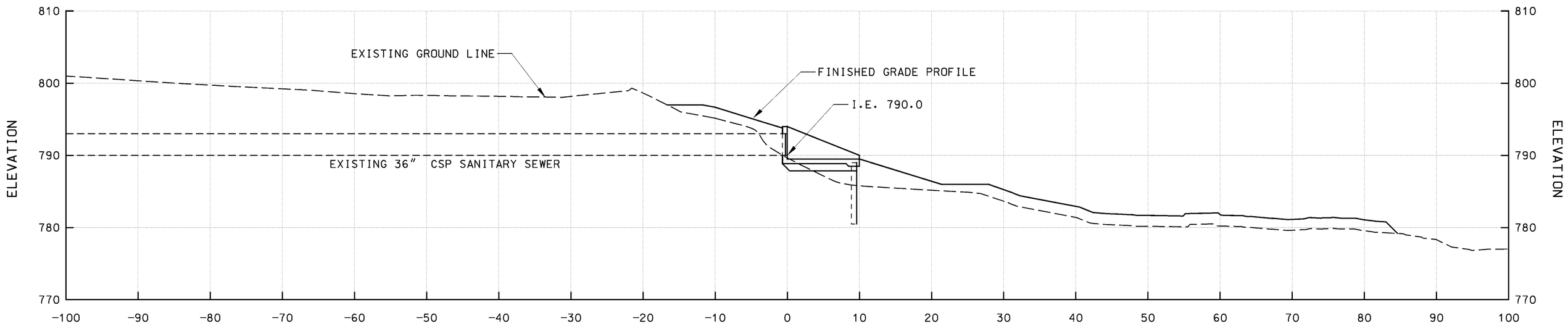

PIPE PROFILE
OUTLET 1

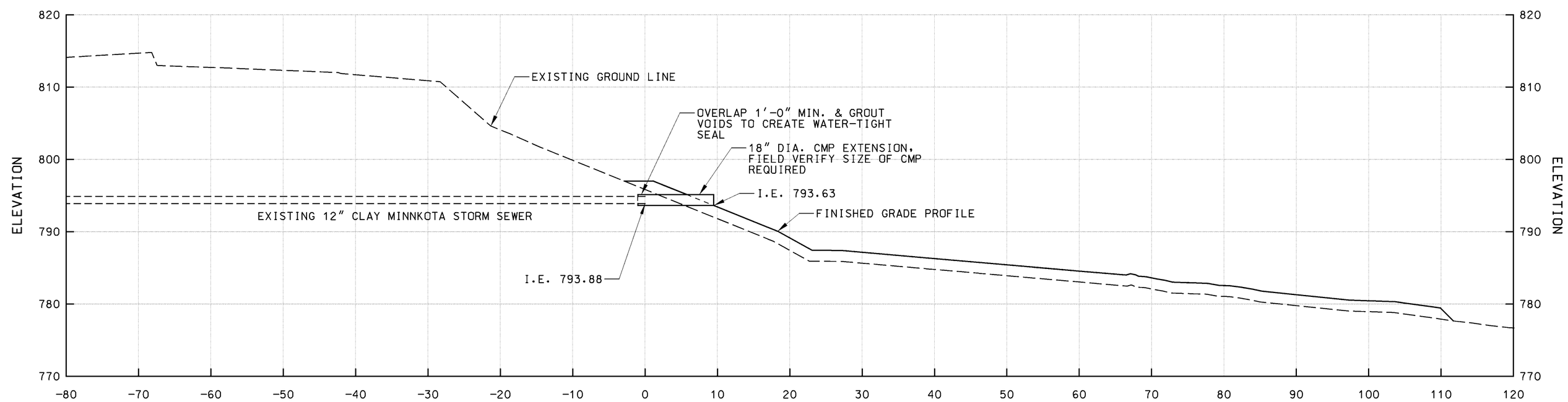

PIPE PROFILE
OUTLET 3

NOTE:

1. THE BOULDERS FOR THE RAPIDS ARE NOT SHOWN.

REFERENCES:

1. SEWER OUTLET HEADWALLS

DWG NO:

64/014

US Army Corps of Engineers
St. Paul District

Symbol	Description	Date	Appr.
	AS-BUILT AS OF DECEMBER 2001		

DESIGNED: CAA
CHECKED: RGB
DRAWN: CAA
DESIGNED: MDL
CHECKED: MDL
SCALE:
DATE: MAR 2000
CADD FILE NAME: CG264072.DGN
SOL NO. DACW37-00-B-0003
AE APPROVING OFFICIAL:
ED-D
ED-H

DEPARTMENT OF THE ARMY
ST. PAUL, MINNESOTA
CORPS OF ENGINEERS
ST. PAUL DISTRICT

BANK STABILIZATION RIVERSIDE DAM
FLOOD CONTROL
PIPE PROFILES
OUTLETS 1 & 3

DRAWING NUMBER:
R-P-GF-64/012

SHT 14 OF 20

AS-BUILT

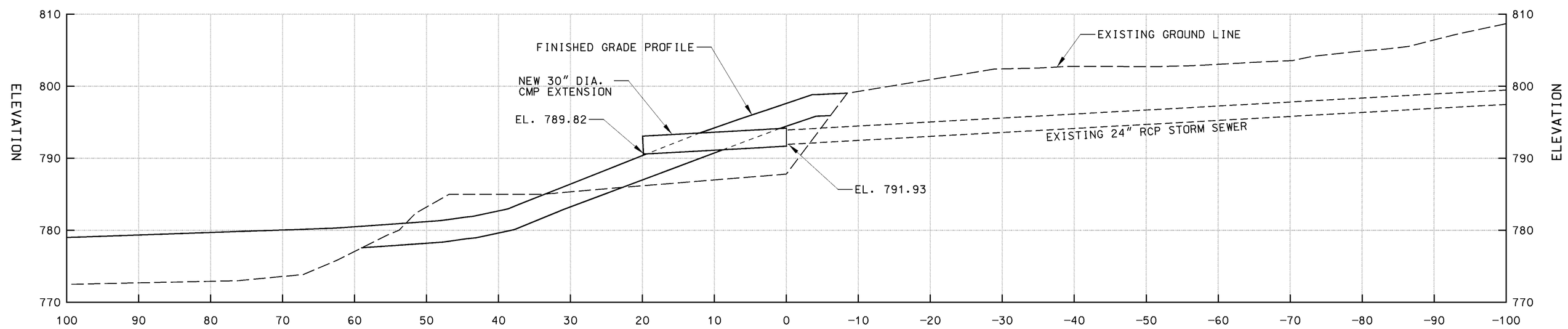

PIPE PROFILE
OUTLET 5

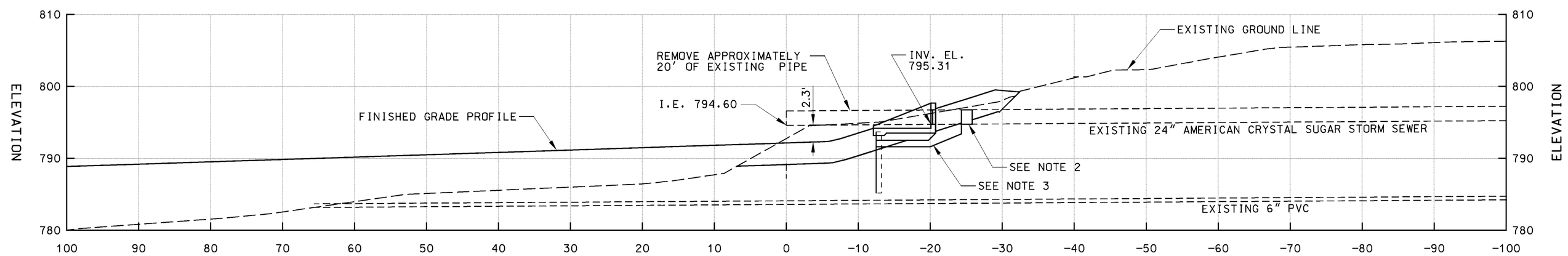

PIPE PROFILE
OUTLET 6

NOTES:

1. THE BOULDERS FOR THE RAPIDS ARE NOT SHOWN.
2. INSTALLED 18" CONCRETE COLLAR TO REPAIR LEAKING AMERICAN CRYSTAL SUGAR STORM SEWER PIPE.
3. PLACED 5 C.Y. FLOWABLE (CDF) FILL UNDER OUTLET TO STABILIZE HEADWALL BASE.

REFERENCES:

	DWG NO:
1. SEWER OUTLET HEADWALLS	64/014

US Army Corps of Engineers
St. Paul District

Symbol	Description	Date	Appr.
	AS-BUILT AS OF DECEMBER 2001		

DESIGNED: CAA
CHECKED: RGB
DRAWN: CAA
DESIGNED: MDL
CHECKED: MDL
SCALE:
DATE: MAR 2000
CADD FILE NAME: G026401 3.DGN
SOLICITATION NO.: DACW37-00-B-0003
AE APPROVING OFFICIAL:

DEPARTMENT OF THE ARMY
ST. PAUL, MINNESOTA
CORPS OF ENGINEERS
ST. PAUL DISTRICT

BANK STABILIZATION RIVERSIDE DAM
FLOOD CONTROL
PIPE PROFILES
OUTLETS 5 - 6

DRAWING NUMBER:
R-P-GF-64/013
SHT 15 OF 20

AS-BUILT

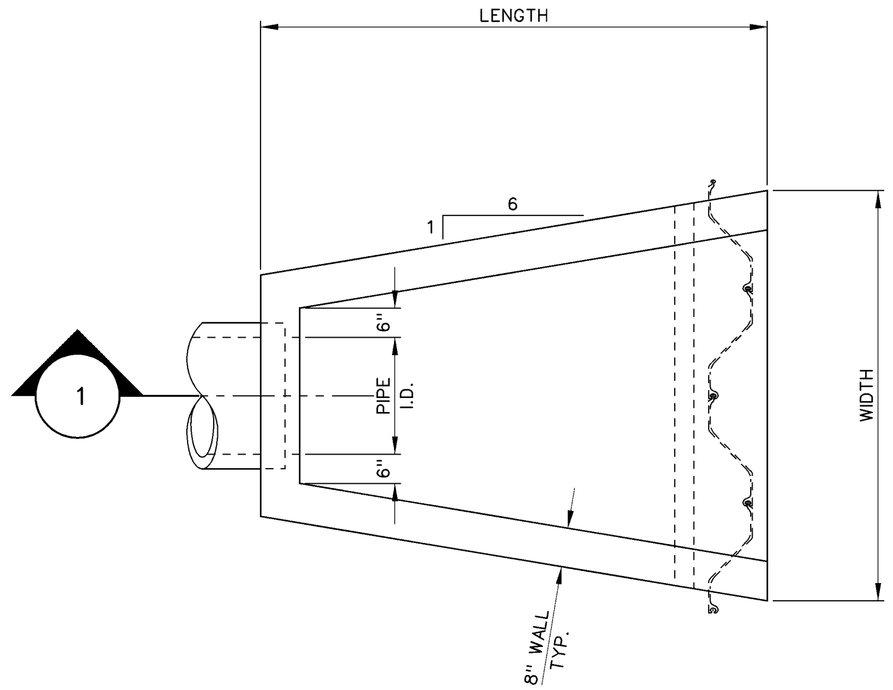

PLAN
OUTLET HEADWALL (TYP.)
SCALE: NONE

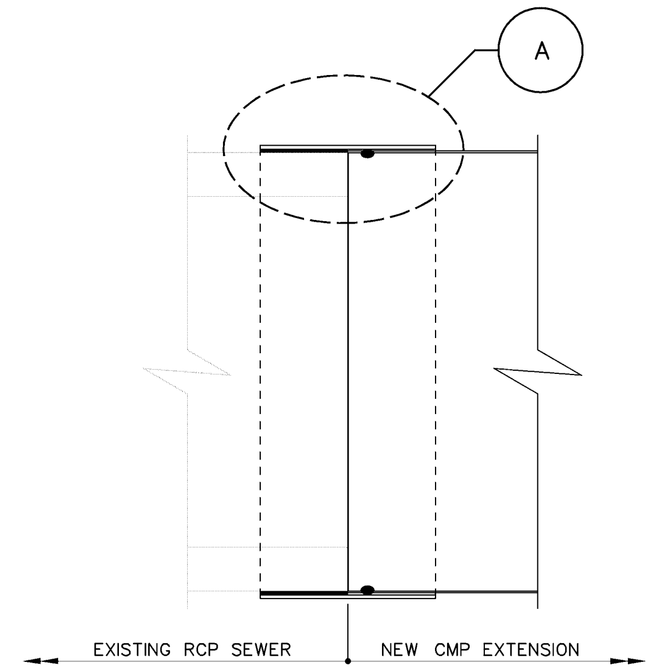

TYPICAL SECTION
RCP/CMP SEWER EXTENSION
SCALE: NONE

SEWER EXTENSION SCHEDULE					
OUTLET NO.	EXISTING SEWER		EXTENSION		
	DIAMETER	TYPE	DIAMETER	MATERIAL	LENGTH
1	36"	CSP (SANITARY)	36"	CMP	0'
3	12"	VCP (STORM)	12"	CMP	11'
5	24"	RCP (STORM)	30"	CMP	20'

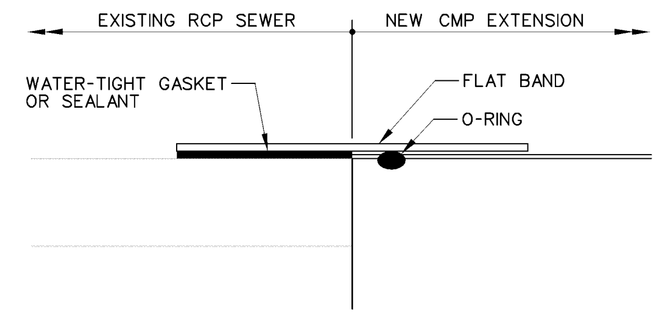

DETAIL
RCP/CMP CONNECTION
SCALE: NONE
A

NOTES:

1. NO WORK TO BE DONE ON OUTLET 2 AND 4.

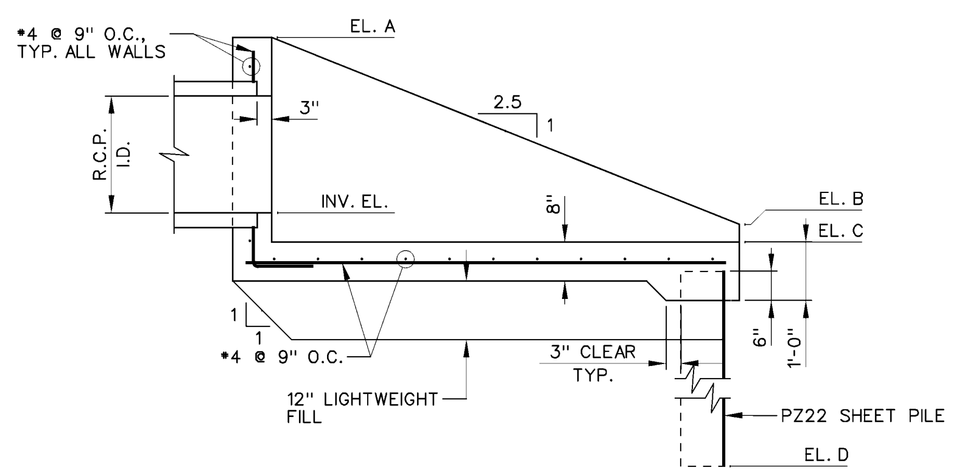

SECTION
OUTLET HEADWALL (TYP.)
SCALE: NONE
1

OUTLET SCHEDULE								
OUTLET NO.	PIPE I.D.	ELEVATIONS (FEET)					LENGTH	WIDTH
		INVERT	A	B	C	D		
1	36" CMP	790.00	794.00	790.00	789.50	780.50	10'-8"	8'-8 1/4"
6	24" RCP	795.31	798.26	795.05	794.76	785.76	8'-8"	7'-0 1/4"

1 0 2 4
SCALE: 1/2" = 1'-0"

US Army Corps of Engineers
St. Paul District

Symbol	Description	Date	Appr.
	AS-BUILT AS OF DECEMBER 2001		

SCALE: AS SHOWN
DATE: MAR 2000
CADD FILE NAME: GF-AS-64014.DGN
SOLICITATION NO. DACW37-00-B-0003
AE APPROVING OFFICIAL:
DESIGNED: KDH
CHECKED: -
DRAWN: LKT
CHECKED: -
DESIGNED: -
CHECKED: -

DEPARTMENT OF THE ARMY
ST. PAUL, MINNESOTA
CORPS OF ENGINEERS
ST. PAUL DISTRICT

BANK STABILIZATION RIVERSIDE DAM
FLOOD CONTROL
SEWER OUTLET HEADWALLS
PLAN, SECTION & SCHEDULE

DRAWING NUMBER:
R-P-GF-64/014
SHT 16 OF 20

AS-BUILT

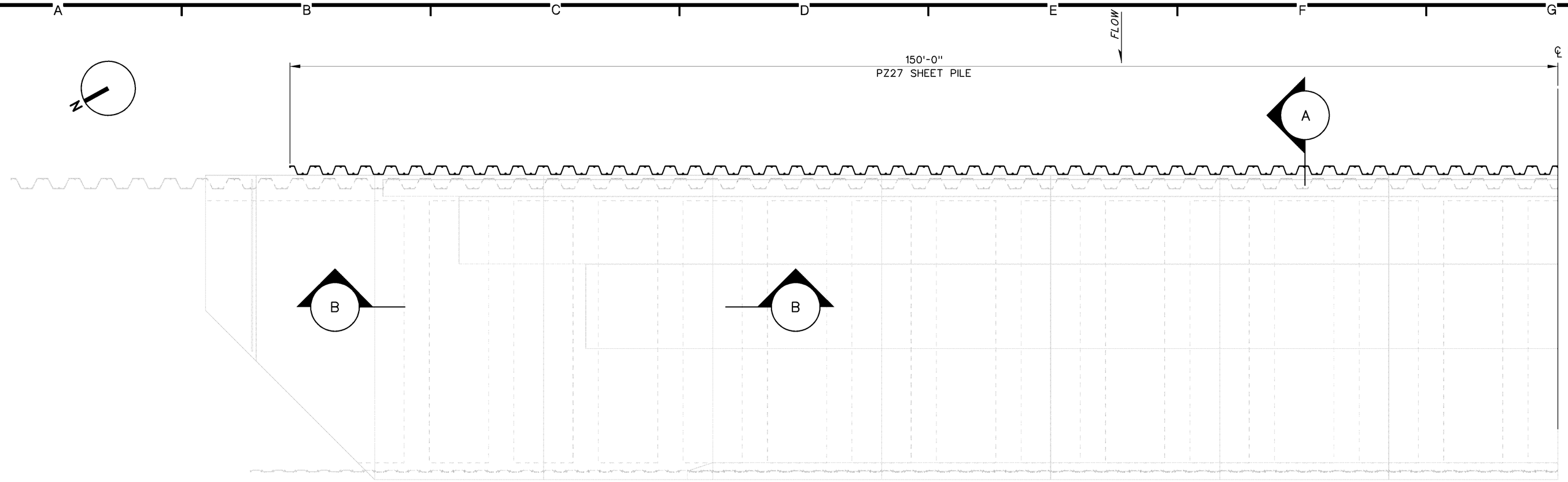

1/2 PLAN

RIVERSIDE PARK DAM (MINNESOTA SIDE)
SCALE: 1/8" = 1'-0"

NOTE:

THE STRUCTURE IS SYMETRICAL ABOUT THE ℄.

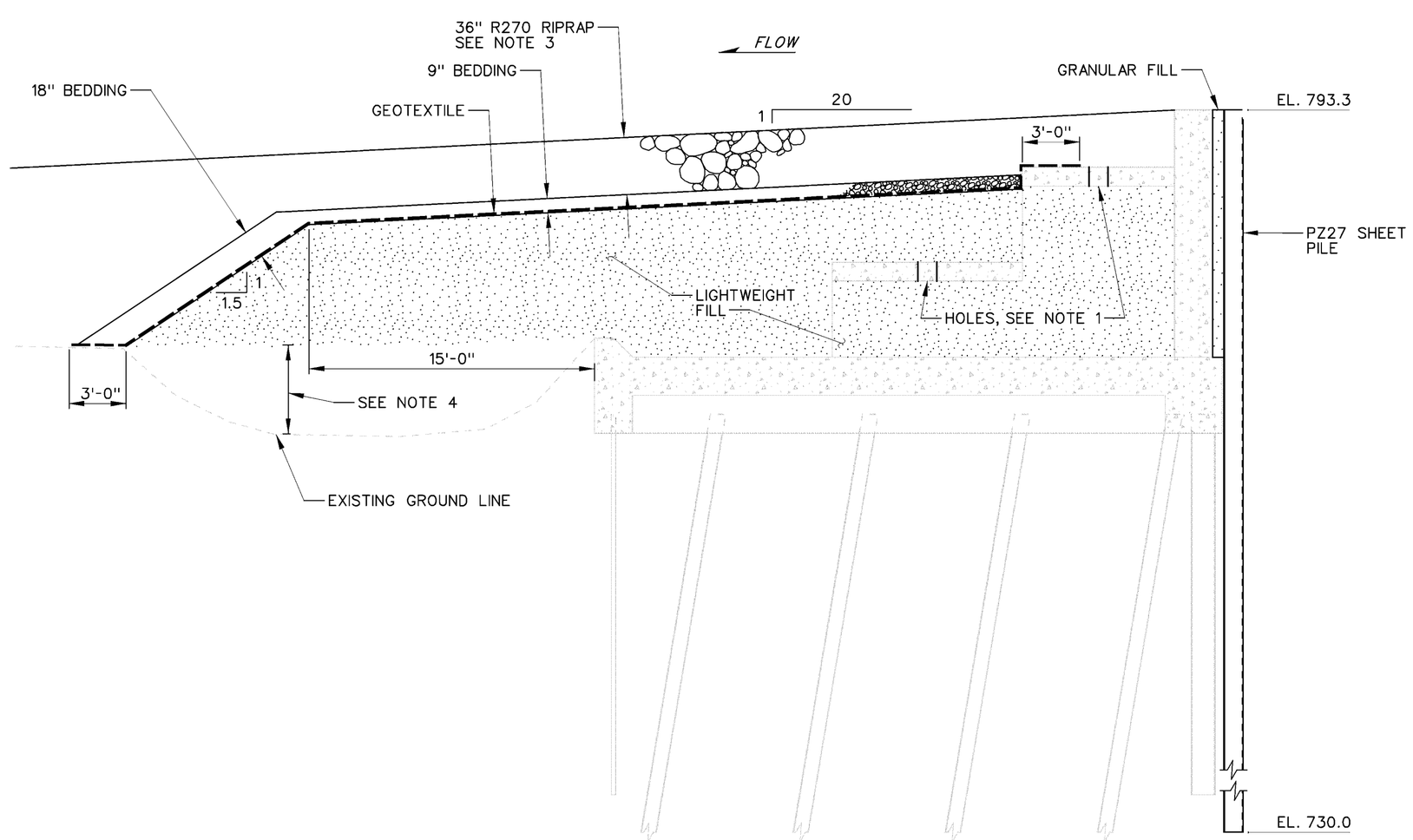

SECTION A

SCALE: 3/16" = 1'-0"

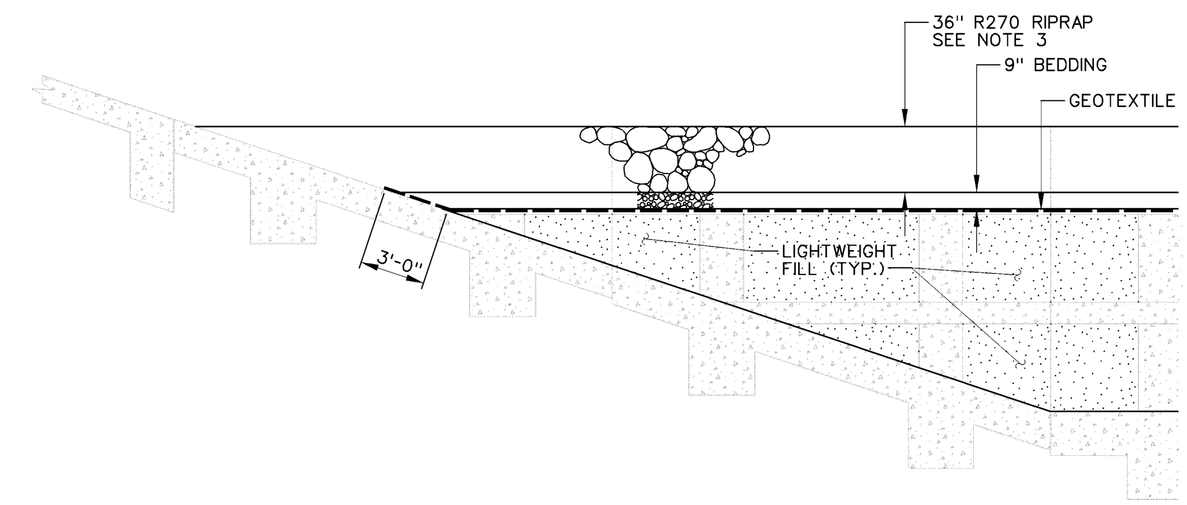

SECTION B

SCALE: 3/16" = 1'-0"

NOTES:

1. ADD HOLES AS NEEDED TO PLACE LIGHTWEIGHT FILL UNDER EXISTING STEPS.
2. THE BOULDERS FOR THE RAPIDS ARE NOT SHOWN.
3. CHINK R270 RIPRAP SURFACE WITH BEDDING FLUSH INTO PLACE UNTIL A RELATIVELY SMOOTH SURFACE IS ACHIEVED.
4. FILLED SCOUR HOLE WITH R270 RIPRAP. CHINKED R270 RIPRAP SURFACE WITH BEDDING MATERIAL BEFORE PLACING THE LIGHTWEIGHT FILL.

1 0 8 16
SCALE: 1/8" = 1'-0"

1 0 4 8 12
SCALE: 3/16" = 1'-0"

US Army Corps of Engineers
St. Paul District

Symbol	Description	Date	Appr.
	AS-BUILT AS OF DECEMBER 2001		

DESIGNED: KDH/CWB
CHECKED: RGB
DRAWN: LKT
CHECKED: MDL
SCALE: AS SHOWN
DATE: MAR 2000
CADD FILE NAME: GF-AS-64015.DGN
SOLICITATION NO.: DACW37-00-B-0003
AE APPROVING OFFICIAL:

DEPARTMENT OF THE ARMY
ST. PAUL, MINNESOTA
CORPS OF ENGINEERS
ST. PAUL DISTRICT

BANK STABILIZATION RIVERSIDE DAM
FLOOD CONTROL
RIVERSIDE DAM MODIFICATIONS
(MINNESOTA SIDE)
PLAN & SECTIONS

DRAWING NUMBER:
R-P-GF-64/015

SHT 17 OF 20

AS-BUILT

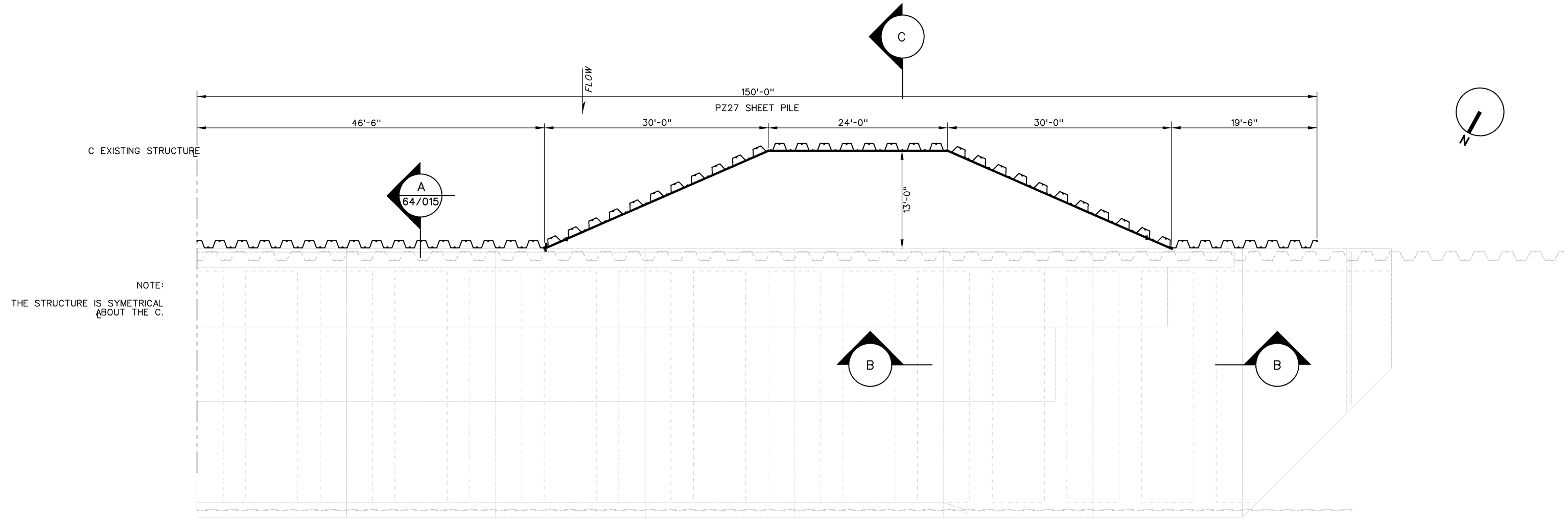

NOTE:
THE STRUCTURE IS SYMETRICAL ABOUT THE ℄.

1/2 PLAN

RIVERSIDE PARK DAM (NORTH DAKOTA SIDE)

SCALE: 1/8" = 1'-0"

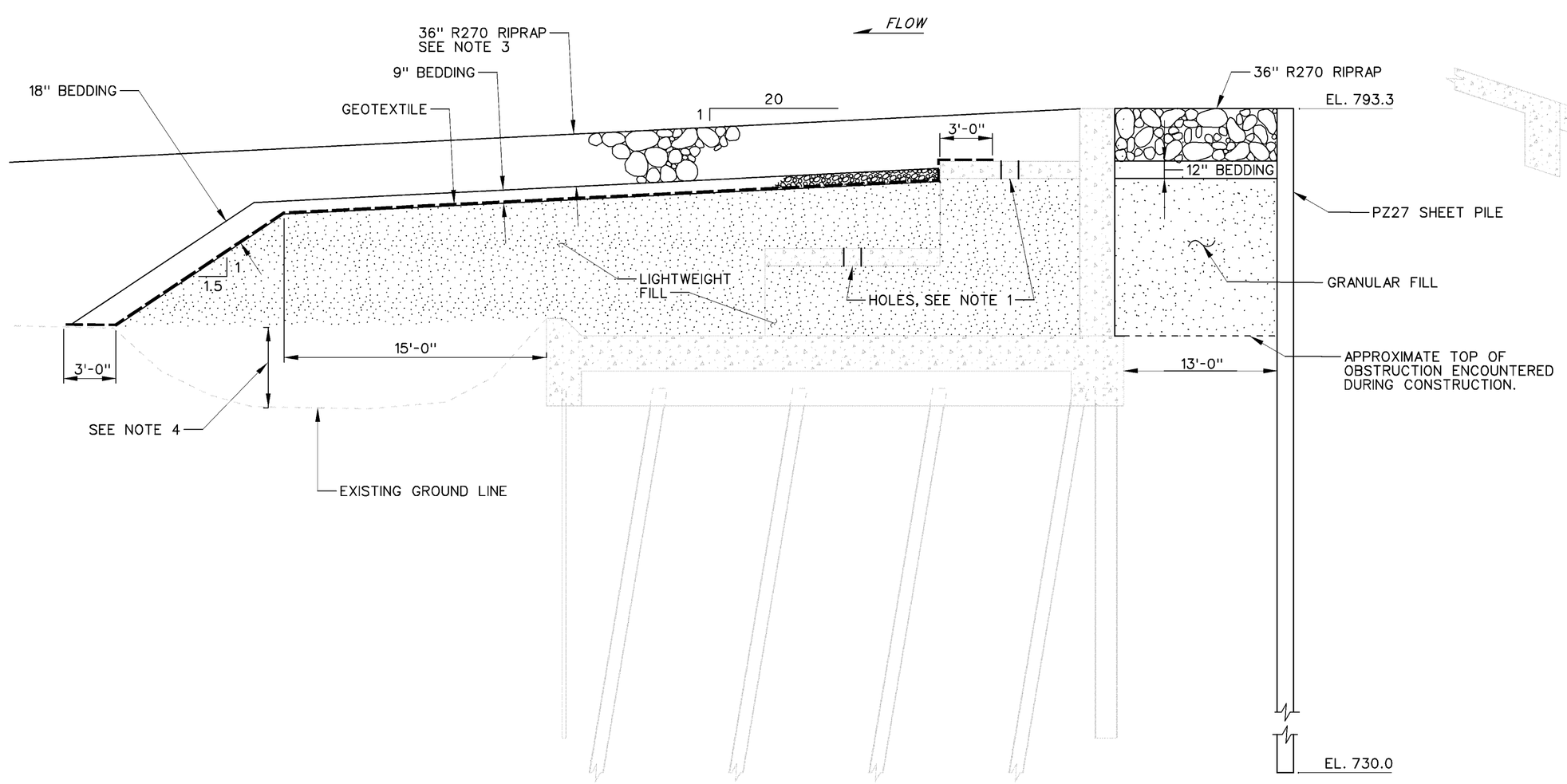

SECTION C

SCALE: 3/16" = 1'-0"

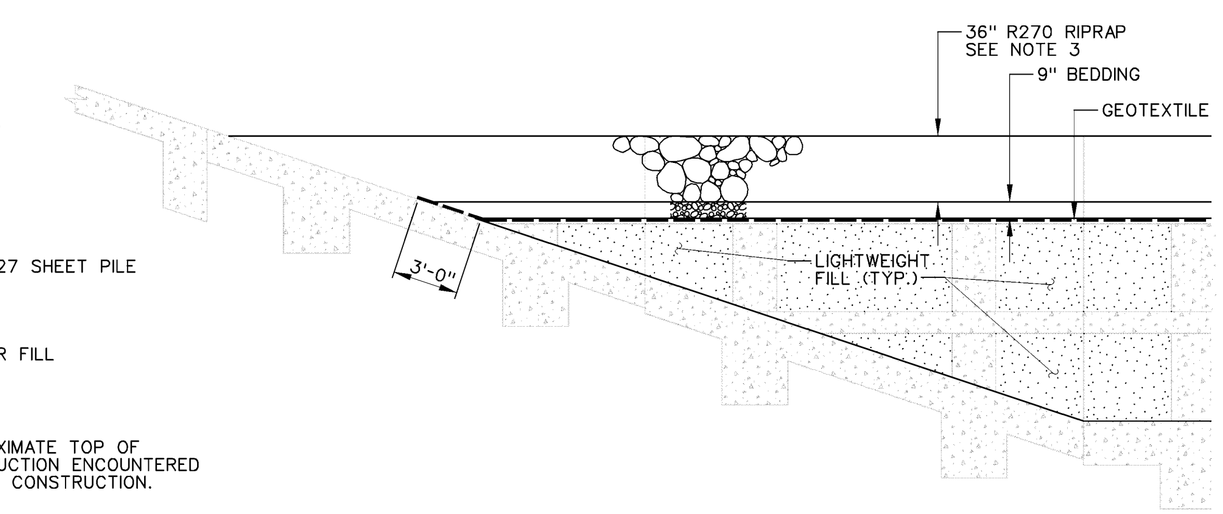

SECTION B

SCALE: 3/16" = 1'-0"

NOTES:

1. ADD HOLES AS NEEDED TO PLACE LIGHTWEIGHT FILL UNDER EXISTING STEPS.
2. THE BOULDERS FOR THE RAPIDS ARE NOT SHOWN.
3. CHINK R270 RIPRAP SURFACE WITH BEDDING FLUSH INTO PLACE UNTIL A RELATIVELY SMOOTH SURFACE IS ACHIEVED.
4. FILLED SCOUR HOLE WITH R270 RIPRAP. CHINKED R270 RIPRAP SURFACE WITH BEDDING MATERIAL BEFORE PLACING THE LIGHTWEIGHT FILL.

1 0 8 16
SCALE: 1/8" = 1'-0"

1 0 4 8 12
SCALE: 3/16" = 1'-0"

US Army Corps of Engineers
St. Paul District

Symbol	Description	Date	Appr.
	AS-BUILT AS OF DECEMBER 2001		

DESIGNED: KDH/CWB
CHECKED: RGB
DRAWN: LKT
DESIGNED: MEJ
CHECKED: MDL
SCALE: AS SHOWN
DATE: MAR 2000
CADD FILE NAME: GFAS-64015A.DGN
SOLN NO. DACW37-00-B-0003
AE APPROVING OFFICIAL:
ED-D
ED-H

DEPARTMENT OF THE ARMY
ST. PAUL, MINNESOTA
CORPS OF ENGINEERS
ST. PAUL DISTRICT

BANK STABILIZATION RIVERSIDE DAM
FLOOD CONTROL
RIVERSIDE DAM MODIFICATIONS
(NORTH DAKOTA SIDE)
PLAN & SECTIONS

DRAWING NUMBER:
R-P-GF-64/015A

SHT 18 OF 20

AS-BUILT

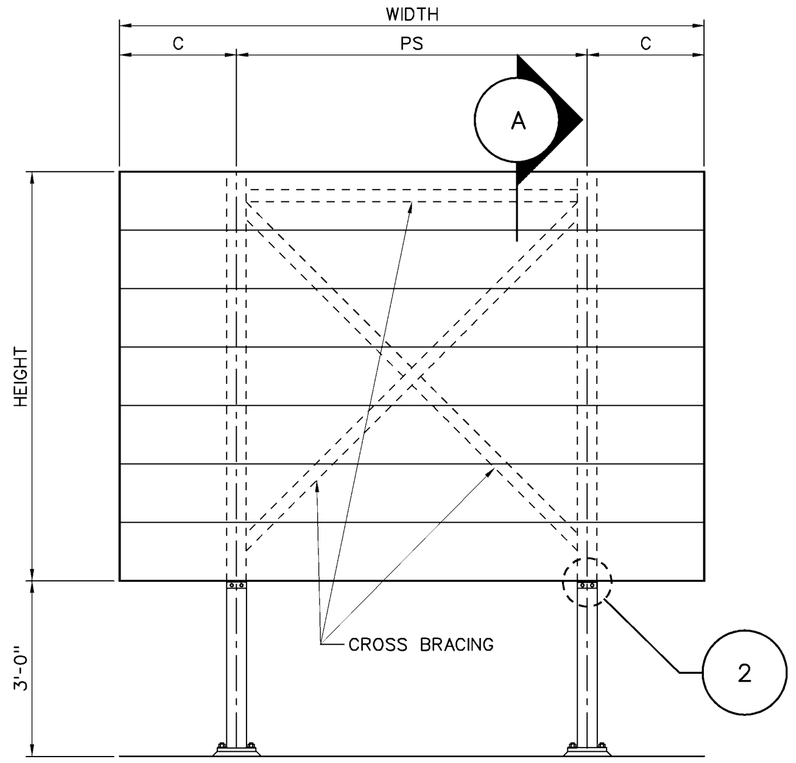

ELEVATION

WTW-08A, SIGN PANEL
SCALE: 1/2" = 1'-0"

SIGN SCHEDULE						
SIGN NAME	SPEC. CODE	DIMENSIONS				NO. OF EXTRUDED SIGN PANELS (12")
		HEIGHT	WIDTH	C	PS	
A	WTW-08A	7'-0"	10'-0"	2'-0"	6'-0"	7
B	WTW-08A	8'-0"	11'-6"	2'-6"	6'-6"	8

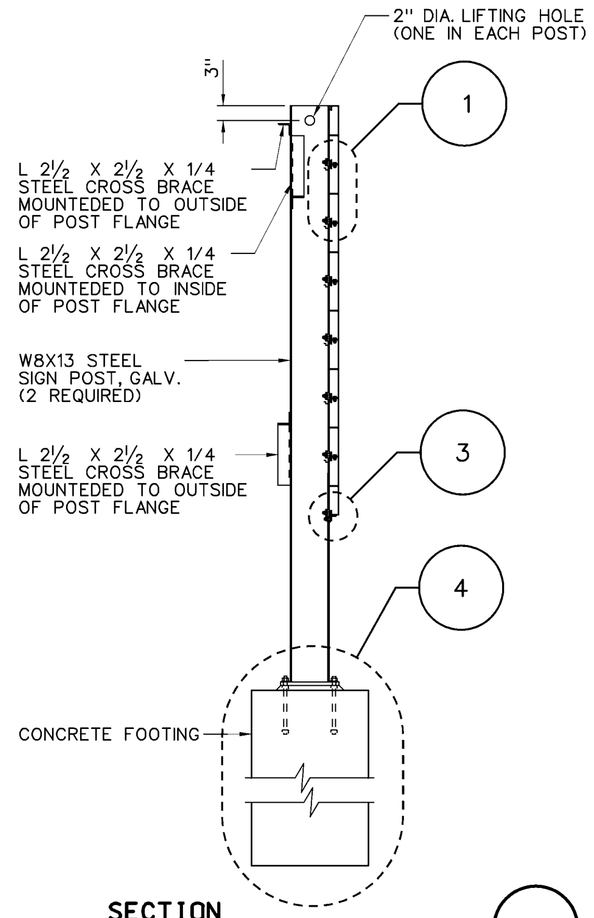

SECTION

SIGN PANEL
SCALE: ½" = 1'-0"
A

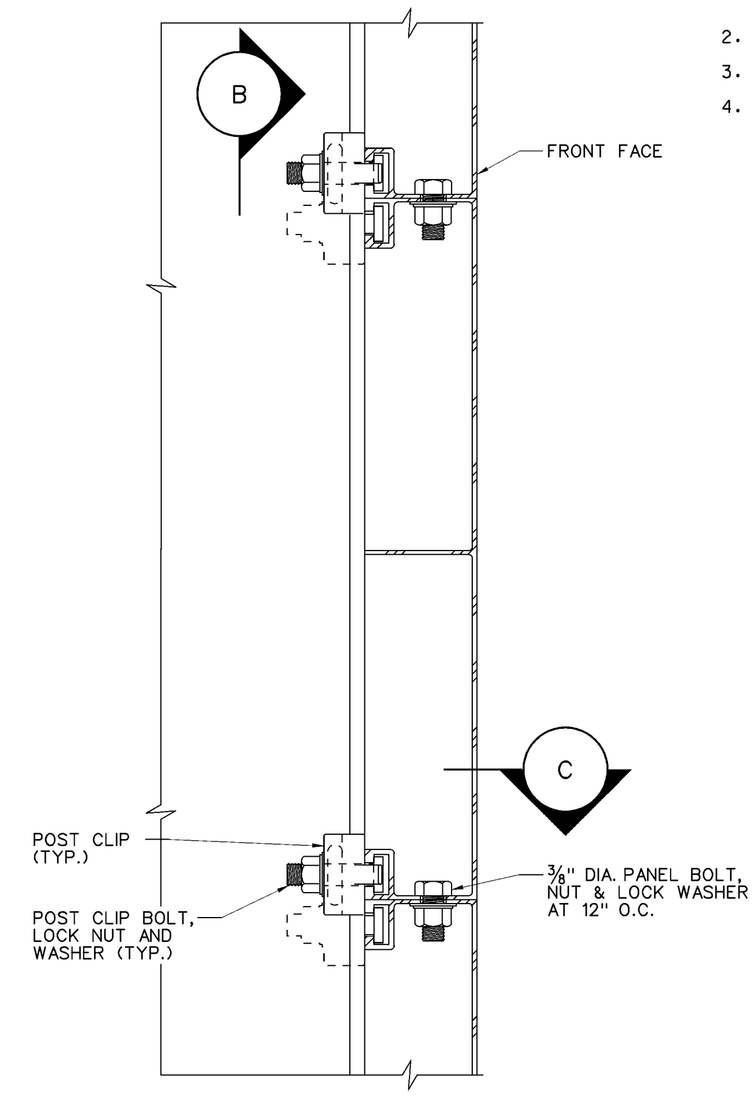

DETAIL

SIGN PANEL ATTACHMENT
SCALE: 6" = 1'-0"
1

NOTES:

1. POST CLIPS SHALL BE INSTALLED ON BOTH SIDES OF EACH POST AT EACH PANEL JOINT AND TORQUED TO 140 TO 165 LB-IN.
2. TWO OF EACH SIGN REQUIRED.
3. STEEL MEMBERS AND FASTNERS SHALL BE GALVANIZED AFTER FABRICATION.
4. CROSS BRACES SHALL BE MOUNTED TO POST WITH ½" DIA. A325 BOLTS.

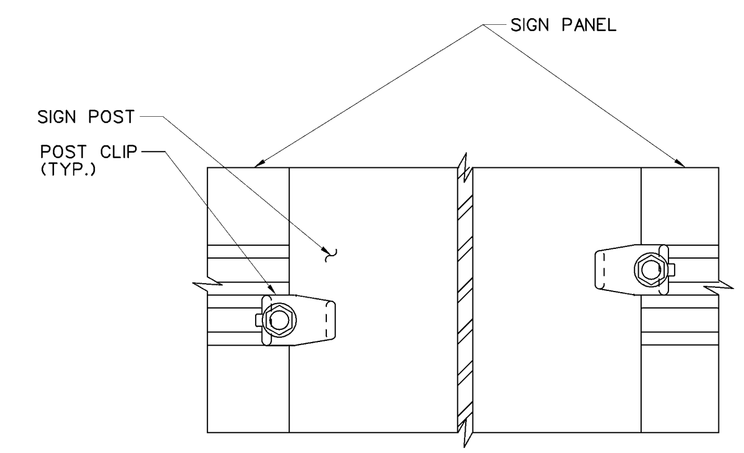

SECTION

SIGN PANEL ATTACHMENT (SEE NOTE 3)
SCALE: 6" = 1'-0"
B

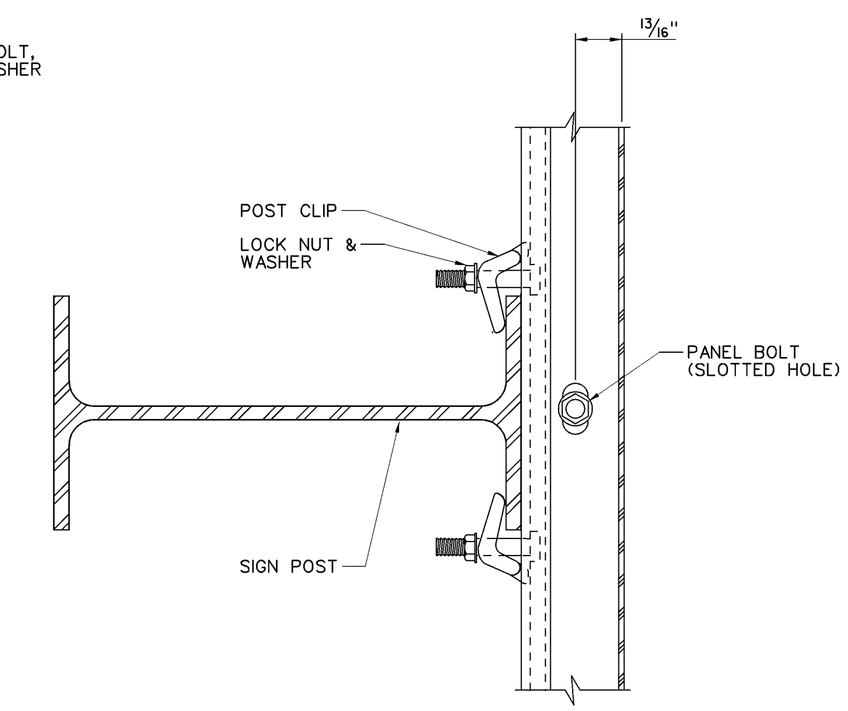

SECTION

SIGN PANEL ATTACHMENT
SCALE: 6" = 1'-0"
C

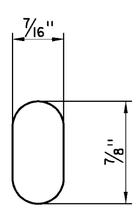

DETAIL

SLOTTED HOLE
SCALE: 12" = 1'-0"

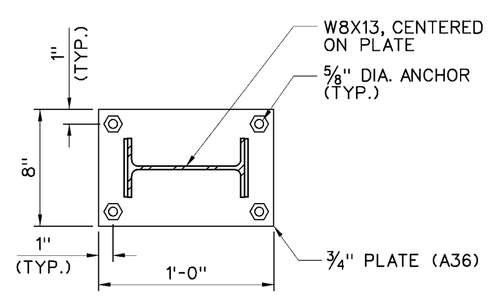

PLAN

POST BASE PLATE
SCALE: 1 1/2 = 1'-0"

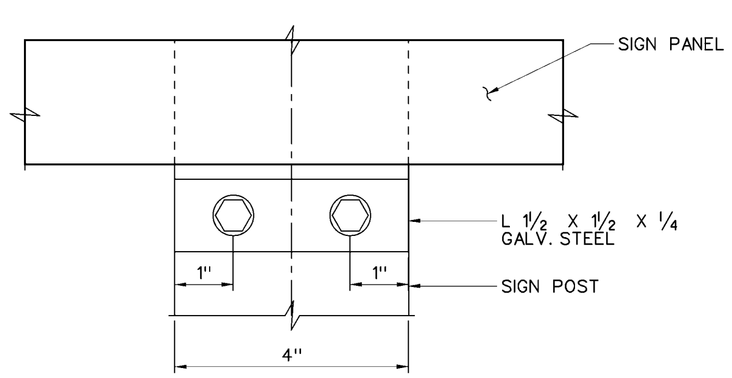

DETAIL

SUPPORT ANGLE
SCALE: 6" = 1'-0"
2

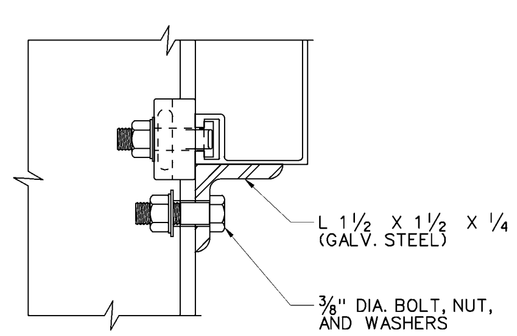

DETAIL

ANGLE ATTACHMENT
SCALE: 6" = 1'-0"
3

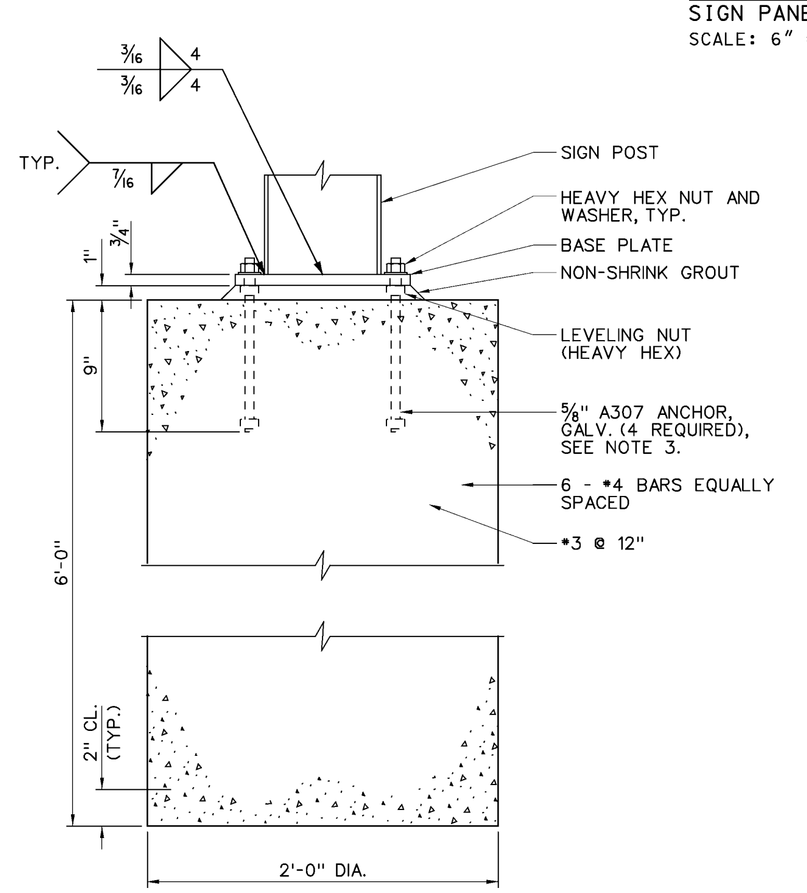

DETAIL

SIGN ANCHORAGE
SCALE: 1½" = 1'-0"
4

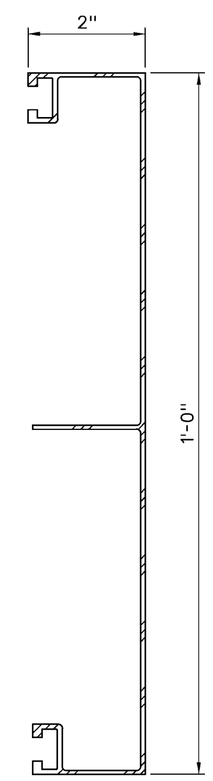

TYPICAL SECTION

12" ALUM. EXTRUDED SIGN PANEL
SCALE: 6" = 1'-0"

1" 0 2" 4"
SCALE: 6" = 1'-0"

1 9" 6" 3" 0 1
SCALE: 1½" = 1'-0"

1 0 2 4
SCALE: ½" = 1'-0"

US Army Corps of Engineers
St. Paul District

Symbol	Description	Date	Appr.
	AS-BUILT AS OF DECEMBER 2001		

DESIGNED: KDH | CHECKED: TMG | DRAWN: LKT | CHECKED: | DATE: MAR 2000
SCALE: | CADD FILE NAME: GEAS46-016.DGN | DESIGNED: DACW37-00-B-0003 | APPROVING OFFICIAL:
ED-D | ED-H

DEPARTMENT OF THE ARMY
ST PAUL, MINNESOTA
CORPS OF ENGINEERS
ST. PAUL DISTRICT

BANK STABILIZATION RIVERSIDE DAM
FLOOD CONTROL
SIGN PANEL
ELEVATION, SECTIONS & DETAILS

DRAWING NUMBER:
R-P-GF-64/016
SHT 19 OF 20

AS-BUILT

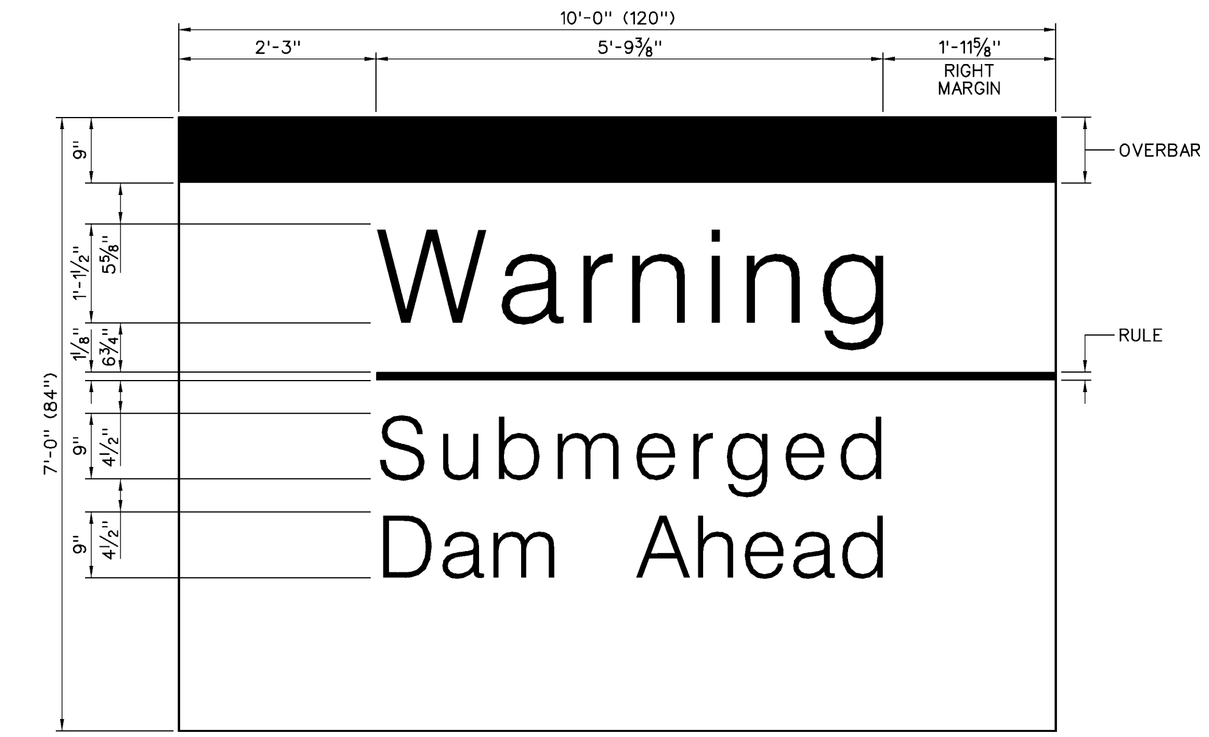

ELEVATION

SIGN "A" PANEL FACE

SCALE: 3/4" = 1'-0"

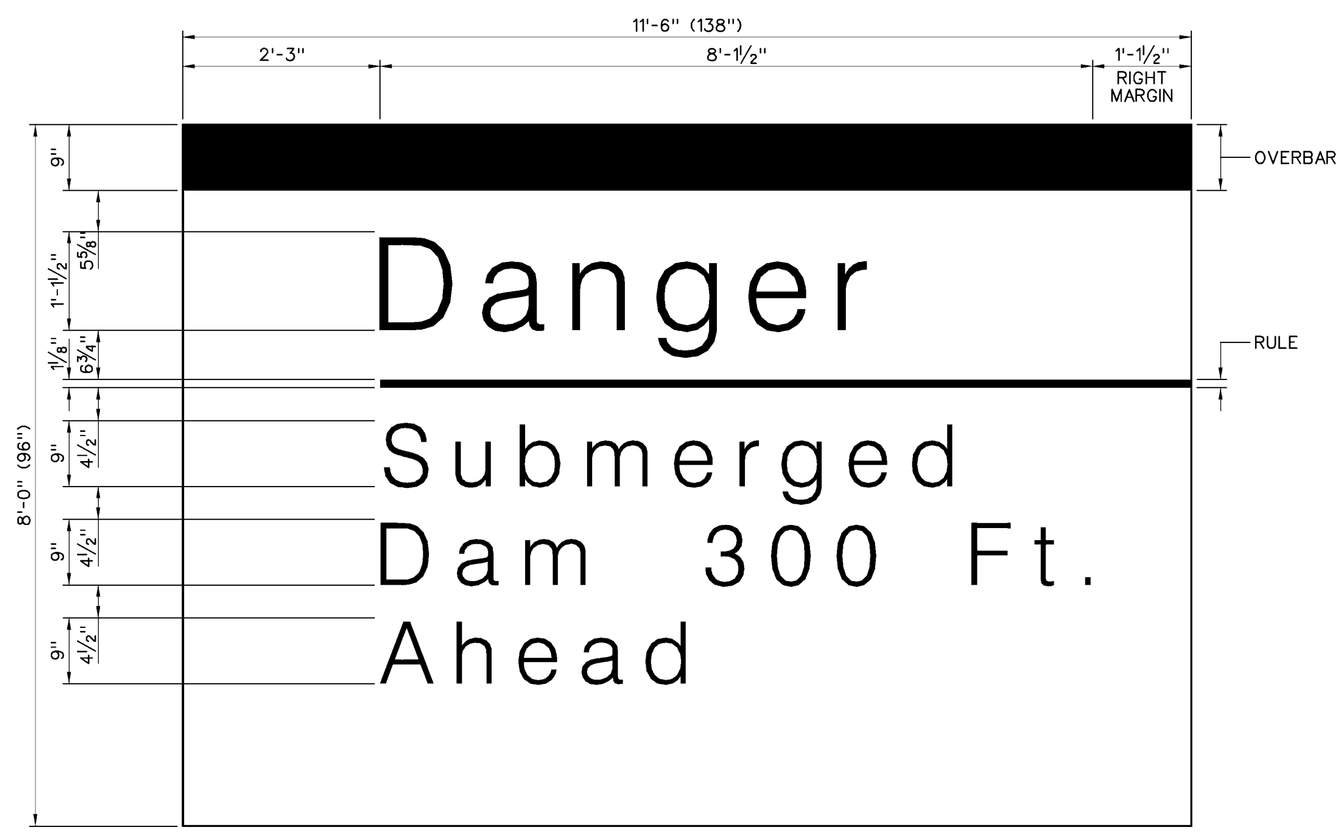

ELEVATION

SIGN "B" PANEL FACE

SCALE: 3/4" = 1'-0"

NOTES:

1. THE SIGN "A" PANEL FACE SHALL BE FABRICATED USING THE FOLLOWING LEGEND:

   TYPEFACE: HELVICA MEDIUM, BLACK NON-RETRO-REFLECTIVE SHEETING
   BACKGROUND: LEMON YELLOW RETRO-REFLECTIVE SHEETING
   OVERBAR & RULE: BLACK NON-RETRO-REFLECTIVE SHEETING

2. THE SIGN "B" PANEL FACE SHALL BE FABRICATED USING THE FOLLOWING LEGEND:

   TYPEFACE: HELVICA MEDIUM, WHITE RETRO-REFLECTIVE SHEETING
   BACKGROUND: RED RETRO-REFLECTIVE SHEETING
   OVERBAR & RULE: WHITE RETRO-REFLECTIVE SHEETING

1 6" 0 1 2
SCALE: 3/4" = 1'-0"

US Army Corps of Engineers
St. Paul District

Symbol	Description	Date	Appr.
	AS-BUILT AS OF DECEMBER 2001		

DESIGNED: CAA/KDH
CHECKED: TMG
DRAWN: LKT
DESIGNED:
CHECKED:
SCALE:
DATE: MAR 2000
CADD FILE NAME: GFAS46407T.DGN
SOLICITATION NO. DACW37-00-B-0003
AE APPROVING OFFICIAL:

DEPARTMENT OF THE ARMY
ST. PAUL, MINNESOTA
CORPS OF ENGINEERS
ST. PAUL DISTRICT

BANK STABILIZATION RIVERSIDE DAM
FLOOD CONTROL
PANEL FACE LAYOUT
ELEVATIONS

DRAWING NUMBER:
R-P-GF-64/017

SHT 20 OF 20

AS-BUILT

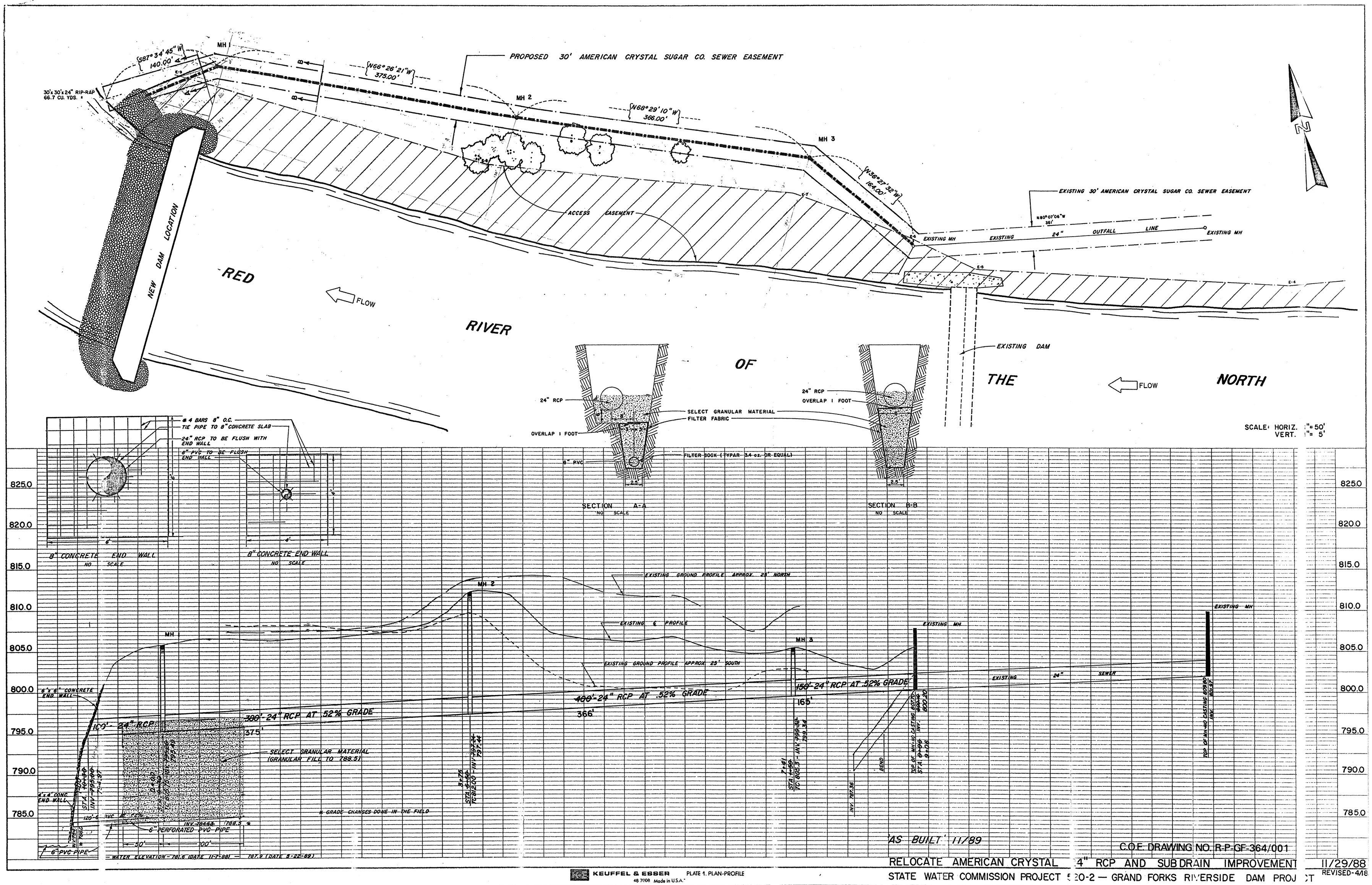
PROPOSED 30' AMERICAN CRYSTAL SUGAR CO. SEWER EASEMENT
S87°34'45"W 140.00'
N66°26'21"W 375.00'
N68°29'10"W 366.00'
N36°27'32"W 164.00'
MH
MH 2
MH 3
30'x30'x24" RIP-RAP 66.7 CU. YDS.
NEW DAM LOCATION
ACCESS EASEMENT
EXISTING 30' AMERICAN CRYSTAL SUGAR CO. SEWER EASEMENT
N80°07'06"W 361'
EXISTING MH
EXISTING 24" OUTFALL LINE
EXISTING MH
RED RIVER OF THE NORTH
FLOW
EXISTING DAM
SCALE: HORIZ. 1"=50'
VERT. 1"=5'
24" RCP
OVERLAP 1 FOOT
SELECT GRANULAR MATERIAL
FILTER FABRIC
6" PVC
FILTER SOCK (TYPAR 3.4 oz. OR EQUAL)
SECTION A-A
NO SCALE
SECTION B-B
NO SCALE
#4 BARS 8" O.C.
TIE PIPE TO 8" CONCRETE SLAB
24" RCP TO BE FLUSH WITH END WALL
6" PVC TO BE FLUSH END WALL
8" CONCRETE END WALL
NO SCALE
EXISTING GROUND PROFILE APPROX. 25' NORTH
EXISTING ℄ PROFILE
EXISTING GROUND PROFILE APPROX. 25' SOUTH
6'x6' CONCRETE END WALL
100' 24" RCP
388' 24" RCP AT .52% GRADE
375'
400'-24" RCP AT .52% GRADE
366'
159'-24" RCP AT .52% GRADE
165'
SELECT GRANULAR MATERIAL (GRANULAR FILL TO 788.5)
4'x4' CONC END WALL
6" PERFORATED PVC PIPE
6" PVC PIPE
GRADE CHANGES DONE IN THE FIELD
WATER ELEVATION = 781.6 (DATE 10-7-88) — 787.9 (DATE 8-22-89)
EXISTING 24" SEWER
BEND
825.0
820.0
815.0
810.0
805.0
800.0
795.0
790.0
785.0
PLAN
NOTE BOOK
No.
SURVEYED
PLOTTED
ALIGNMENT CHECKED
RT OF WAY CHECKED
DATE
BY
PROFILE
NOTE BOOK
No.
SURVEYED
PLOTTED
GRADES CHECKED
B.M.'S NOTED
DATE
BY
'AS BUILT' 11/89
C.O.E. DRAWING NO. R-P-GF-364/001
RELOCATE AMERICAN CRYSTAL 24" RCP AND SUBDRAIN IMPROVEMENT
STATE WATER COMMISSION PROJECT 520-2 — GRAND FORKS RIVERSIDE DAM PROJECT
11/29/88
REVISED-4/18
KEUFFEL & ESSER
48 7008 Made in U.S.A.
PLATE 1. PLAN-PROFILE

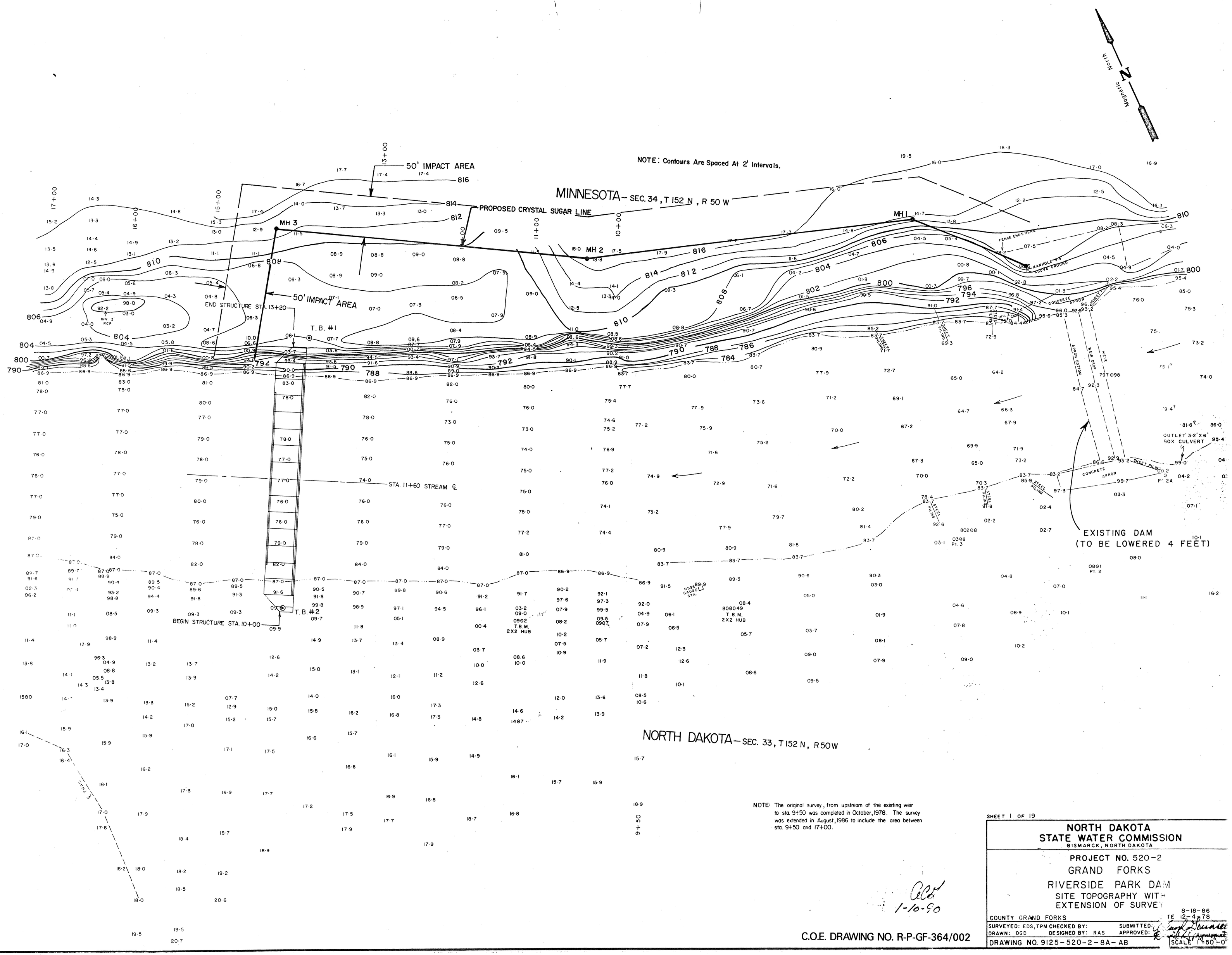

NOTE: The original survey, from upstream of the existing weir to sta. 9+50 was completed in October, 1978. The survey was extended in August, 1986 to include the area between sta. 9+50 and 17+00.

C.O.E. DRAWING NO. R-P-GF-364/002

SHEET 1 OF 19

NORTH DAKOTA
STATE WATER COMMISSION
BISMARCK, NORTH DAKOTA

PROJECT NO. 520-2
GRAND FORKS
RIVERSIDE PARK DAM
SITE TOPOGRAPHY WITH
EXTENSION OF SURVEY

COUNTY GRAND FORKS

SURVEYED: EDS, TPM CHECKED BY: SUBMITTED: 8-18-86
DRAWN: DGD DESIGNED BY: RAS APPROVED: DATE 12-4-78

DRAWING NO. 9125-520-2-8A-AB SCALE 1" = 50'-0"

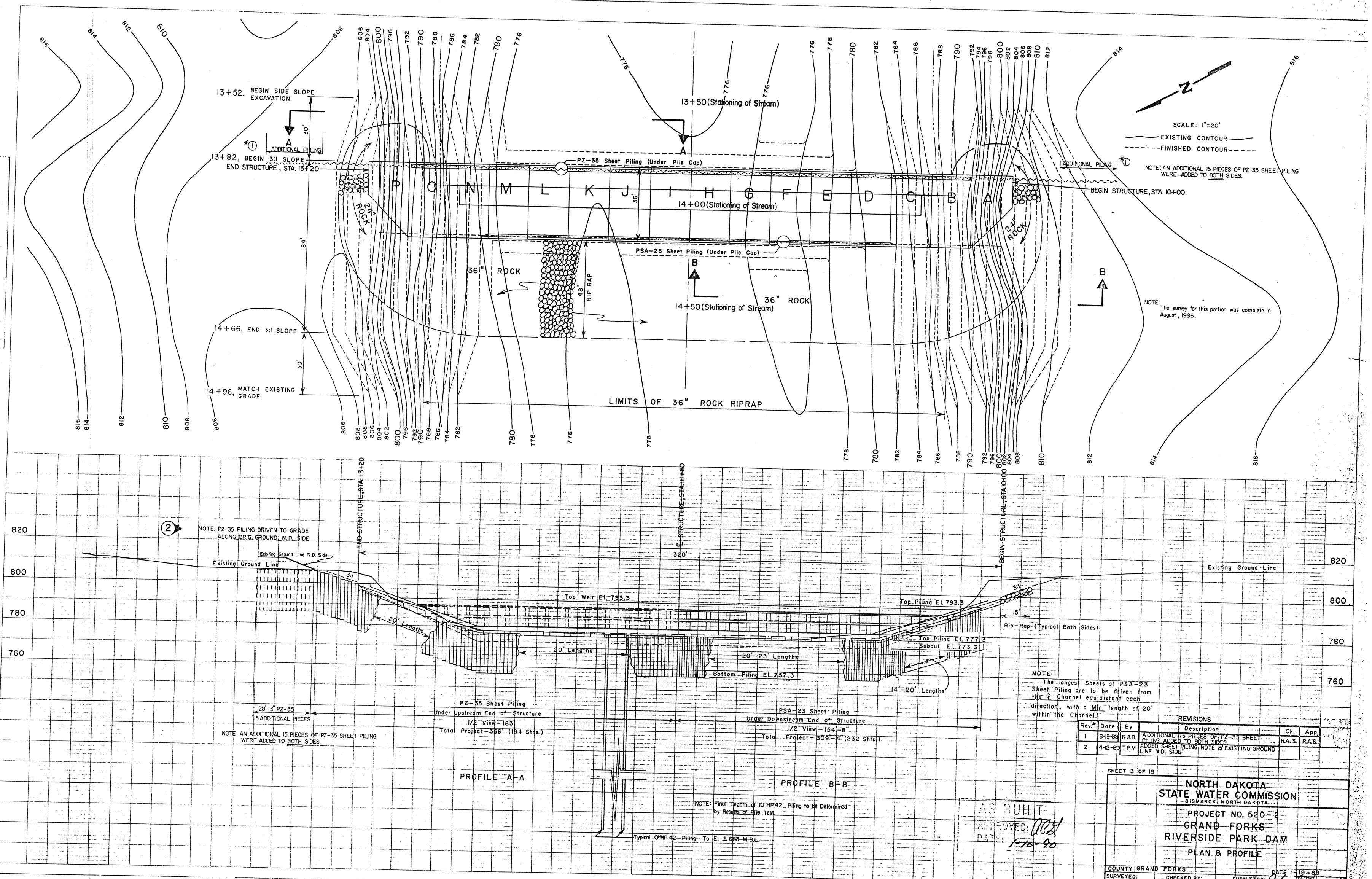

REVISIONS					
Rev.#	Date	By	Description	Ck.	App.
1	8-19-88	R.A.B.	ADDITIONAL 15 PIECES OF PZ-35 SHEET PILING ADDED TO BOTH SIDES	R.A.S.	R.A.S.
2	4-12-89	TPM	ADDED SHEET PILING, NOTE & EXISTING GROUND LINE N.D. SIDE		

SHEET 3 OF 19

NORTH DAKOTA STATE WATER COMMISSION
BISMARCK, NORTH DAKOTA

PROJECT NO. 520-2
GRAND FORKS
RIVERSIDE PARK DAM
PLAN & PROFILE

COUNTY GRAND FORKS
SURVEYED:
DRAWN: R.A.B.
CHECKED BY:
DESIGNED BY: R.A.S.
SUBMITTED:
APPROVED:
DATE 19-88
SCALE 1" = 20'-0"

AS BUILT
APPROVED: RCS
DATE: 1-10-90

C.O.E. DRAWING NO. R-P-GF-364/003
DRAWING NO. 9601-520-2-12-AB

HIGHWAY FEDERAL AID SHEET
PLATE 1-SINGLE PLAN AND PROFILE-FULL LINE
3M TELEDYNE
PRINTED IN U.S.A.

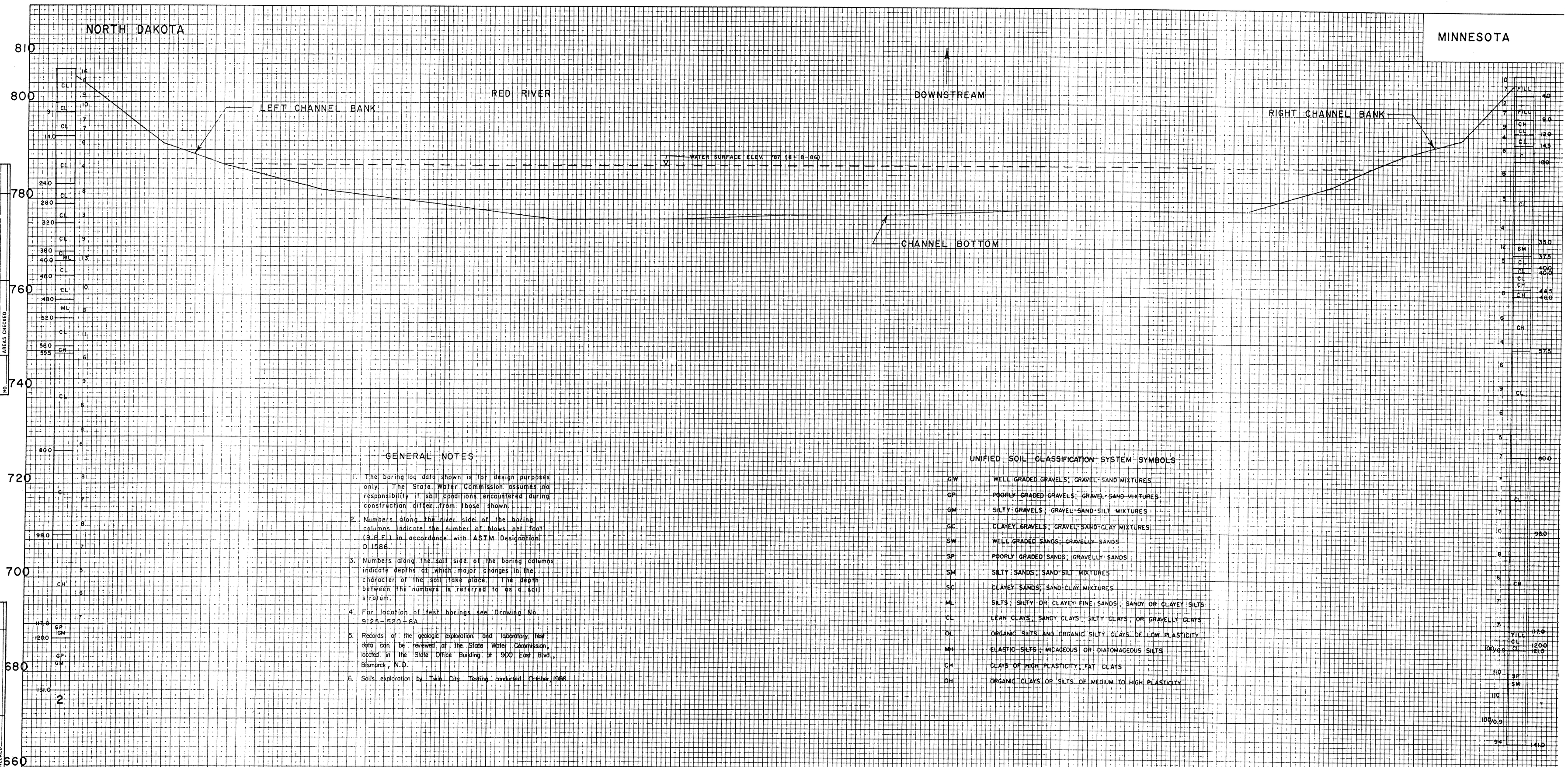

GENERAL NOTES

1. The boring log data shown is for design purposes only. The State Water Commission assumes no responsibility if soil conditions encountered during construction differ from those shown.
2. Numbers along the river side of the boring columns indicate the number of blows per foot (B.P.F.) in accordance with ASTM Designation D 1586.
3. Numbers along the soil side of the boring columns indicate depths at which major changes in the character of the soil take place. The depth between the numbers is referred to as a soil stratum.
4. For location of test borings see Drawing No. 9125-520-6A.
5. Records of the geologic exploration and laboratory test data can be reviewed at the State Water Commission, located in the State Office Building at 900 East Blvd., Bismarck, N.D.
6. Soils exploration by Twin City Testing conducted October, 1986.

UNIFIED SOIL CLASSIFICATION SYSTEM SYMBOLS

GW	WELL GRADED GRAVELS; GRAVEL-SAND MIXTURES
GP	POORLY GRADED GRAVELS; GRAVEL-SAND MIXTURES
GM	SILTY GRAVELS; GRAVEL-SAND-SILT MIXTURES
GC	CLAYEY GRAVELS; GRAVEL-SAND-CLAY MIXTURES
SW	WELL GRADED SANDS; GRAVELLY SANDS
SP	POORLY GRADED SANDS; GRAVELLY SANDS
SM	SILTY SANDS; SAND-SILT MIXTURES
SC	CLAYEY SANDS; SAND-CLAY MIXTURES
ML	SILTS; SILTY OR CLAYEY FINE SANDS; SANDY OR CLAYEY SILTS
CL	LEAN CLAYS; SANDY CLAYS; SILTY CLAYS; OR GRAVELLY CLAYS
OL	ORGANIC SILTS AND ORGANIC SILTY CLAYS OF LOW PLASTICITY
MH	ELASTIC SILTS; MICACEOUS OR DIATOMACEOUS SILTS
CH	CLAYS OF HIGH PLASTICITY; FAT CLAYS
OH	ORGANIC CLAYS OR SILTS OF MEDIUM TO HIGH PLASTICITY

FINAL SURVEY — NO. — NOTE BOOK — SURVEYED — PLOTTED — TEMPLATE — AREAS — AREAS CHECKED — BY — DATE

ORIGINAL SURVEY — NO. — NOTE BOOK — SURVEYED — PLOTTED — TEMPLATE — AREAS — AREAS CHECKED — BY — DATE

SHEET 4 OF 19

NORTH DAKOTA
STATE WATER COMMISSION
BISMARCK, NORTH DAKOTA

PROJECT NO. 520-2
RIVERSIDE PARK DAM

GEOLOGIC PROFILE

COUNTY: GRAND FORKS — DATE: 10-28-86
DRILLED BY: TWIN CITY TESTING CORP. — CHECKED BY: A.G.
SUBMITTED: — APPROVED:
DRAWN: R. A. B.
DRAWING NO. 9602-520-2-13-AB
SCALE: 1" = 10'

ASSISTED
APPROVED
DATE: 1-10-90

KEUFFEL & ESSER A KRATOS Company — PLATE 3, CROSS SECTION
48 7056 Made in U.S.A.

C.O.E. DRAWING NO. R-P-GF-364/004

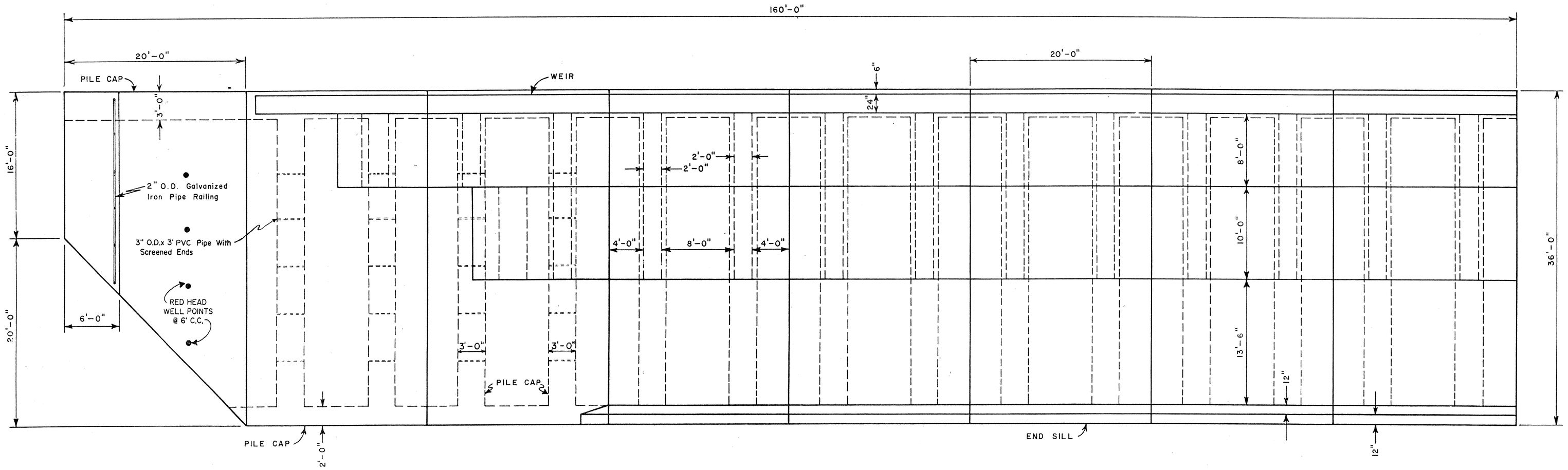

1

1/2 PLAN VIEW – MINN. SIDE

2 NOTE: (4), 1 1/2" Ø X 6' Well Points Were Installed On The Minn. Bank For De-Watering Purposes.

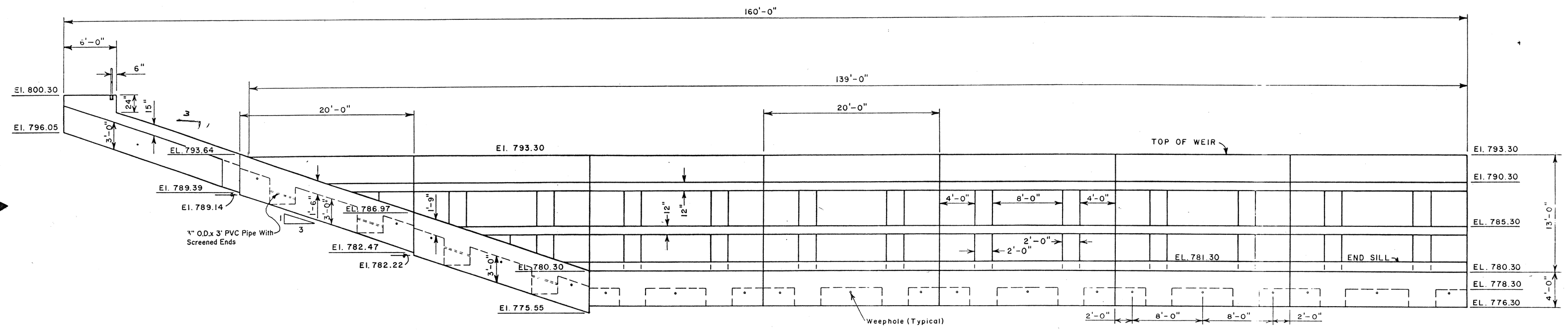

1

1/2 ELEVATION VIEW – MINN. SIDE

C.O.E. DRAWING NO. R-P-GF-364/005

SHEET 5 OF 19

NORTH DAKOTA STATE WATER COMMISSION
BISMARCK, NORTH DAKOTA

PROJECT NO. 520-2

GRAND FORKS
RIVERSIDE PARK DAM

1/2 PLAN & 1/2 ELEVATION VIEWS

COUNTY GRAND FORKS DATE 10-29-17

SURVEYED: CHECKED BY: SUBMITTED:
DRAWN: R.A.B., D.G.D. DESIGNED BY: R.A.S. APPROVED:

DRAWING NO. 9603-520-2-14-AB SCALE 1" = 1'-0"

1-16-96

REV#	DATE	BY	DESCRIPTION
1	4-12-89	T.P.M.	ADD PILE CAP WEEPS TO PLANS
2	4-12-89	TPM	ADD WELL POINT INFORMATION NOTES

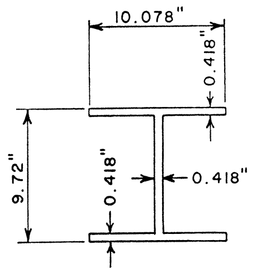

10 HP 42, STRUCTURAL PILING
No Scale

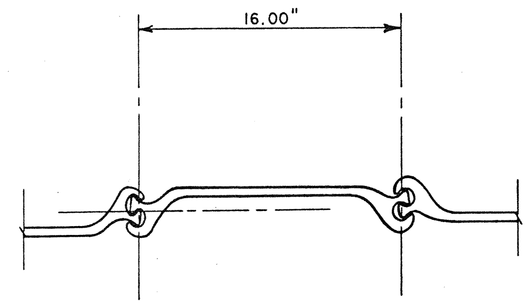

PSA-23, SHEET PILING
No Scale

NOTE: Pile Cap And Structural Piling Not Shown On SECTION A-A.

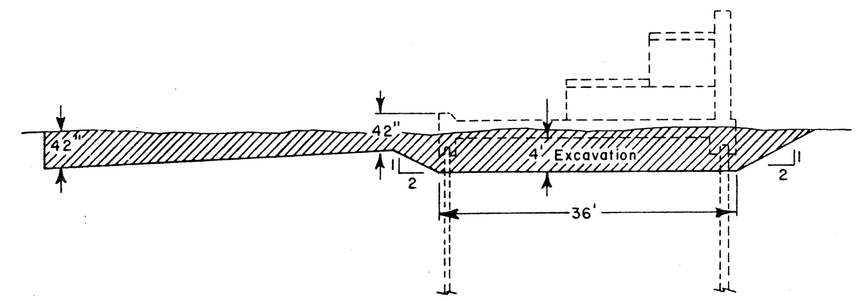

SECTION A-A
DURING CONSTRUCTION
No Scale

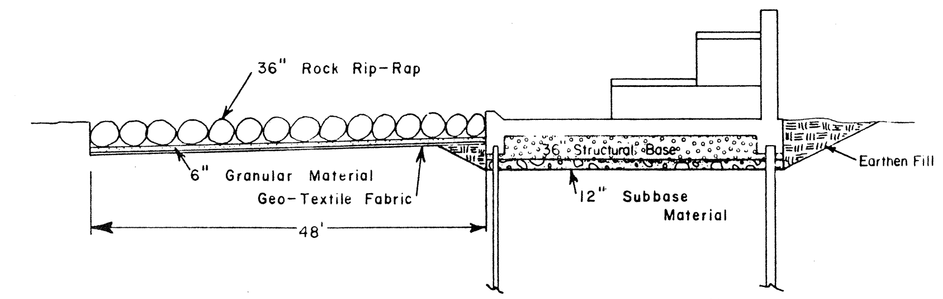

SECTION A-A
AFTER CONSTRUCTION
No Scale

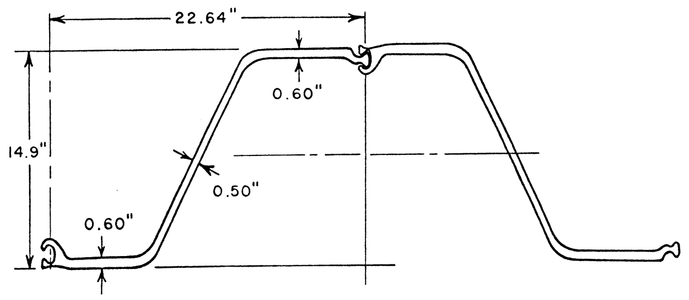

PZ-35 SHEET PILING
No Scale

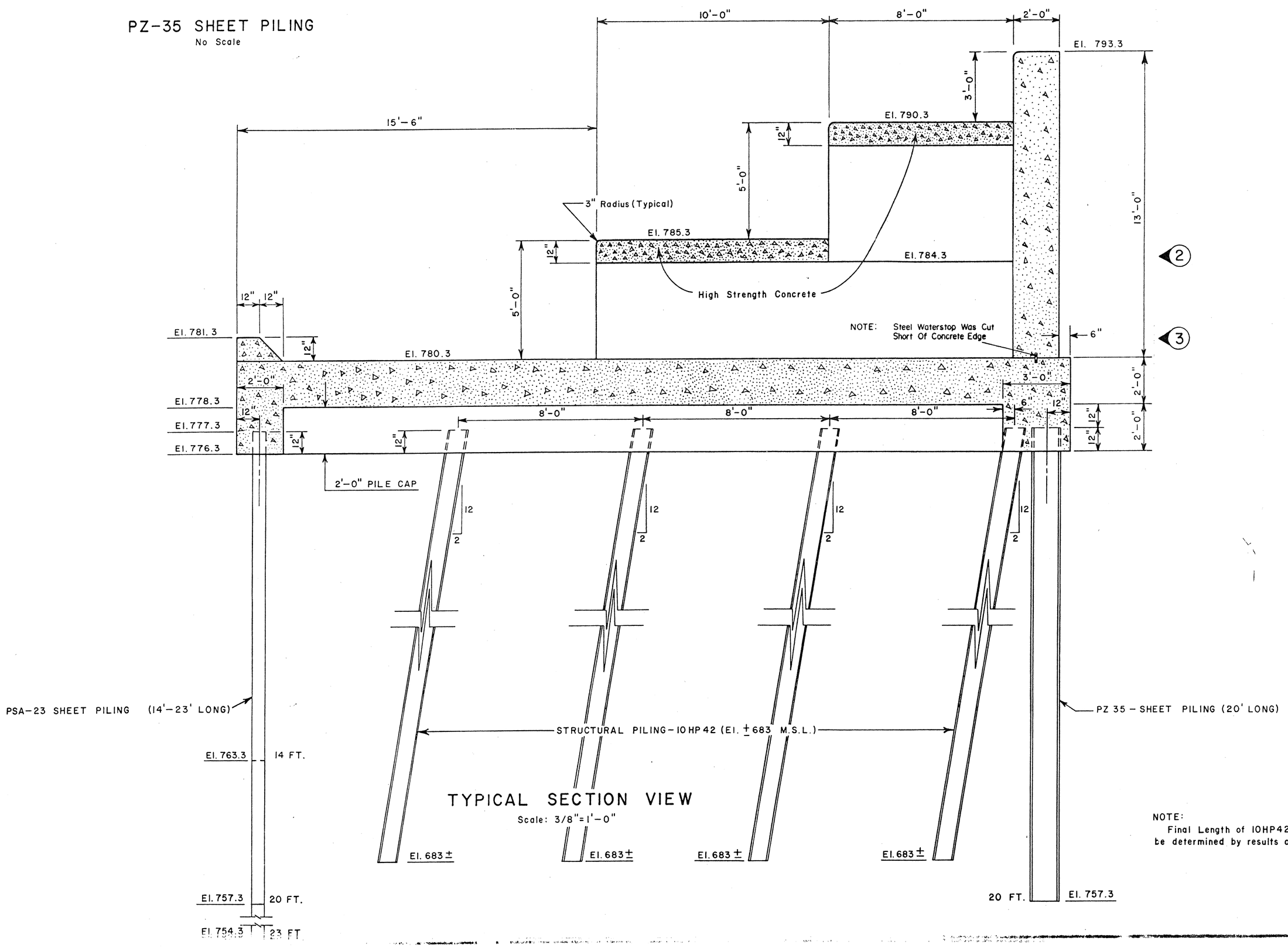

TYPICAL SECTION VIEW
Scale: 3/8"=1'-0"

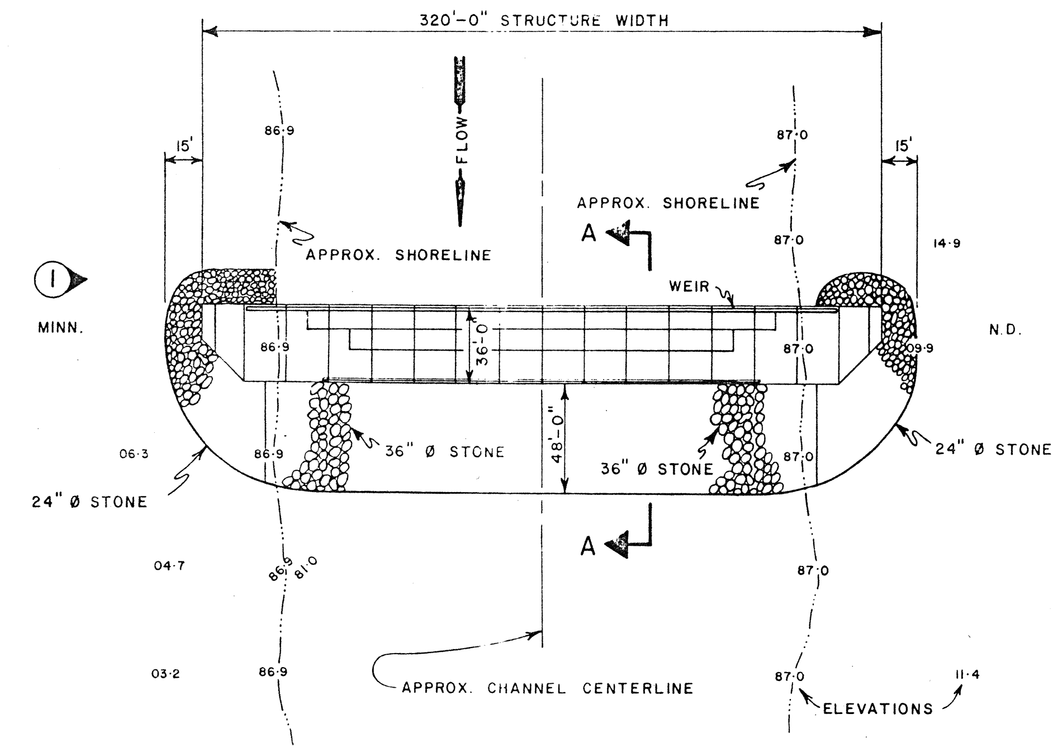

PLAN VIEW
Scale: 1"=50'

NOTE:
Final Length of 10HP42 Piling to be determined by results of Pile Test.

Rev.#	Date	By	Description
1	4-12-89	TPM	EXTEND RIPRAP TO SHORELINE ON MINN. SIDE
2	4-12-89	TPM	ELIMINATE WALL JOINT AT 784.3 EL.
3	4-12-89	TPM	ADD NOTE CONCERNING PLACEMENT OF STEEL WATERSTOP

1-10-90

C.O.E. DRAWING NO. R-P-GF-364/006

SHEET 6 OF 19

NORTH DAKOTA
STATE WATER COMMISSION
BISMARCK, NORTH DAKOTA

PROJECT NO. 520-2

GRAND FORKS
RIVERSIDE PARK DAM

MISCELLANEOUS DETAILS

COUNTY GRAND FORKS DATE 10-27-8

SURVEYED: CHECKED BY: SUBMITTED:
DRAWN: R.A.B., D.G.D. DESIGNED BY: R.A.S. APPROVED:

DRAWING NO. 9604-520-2-15-AB SCALE

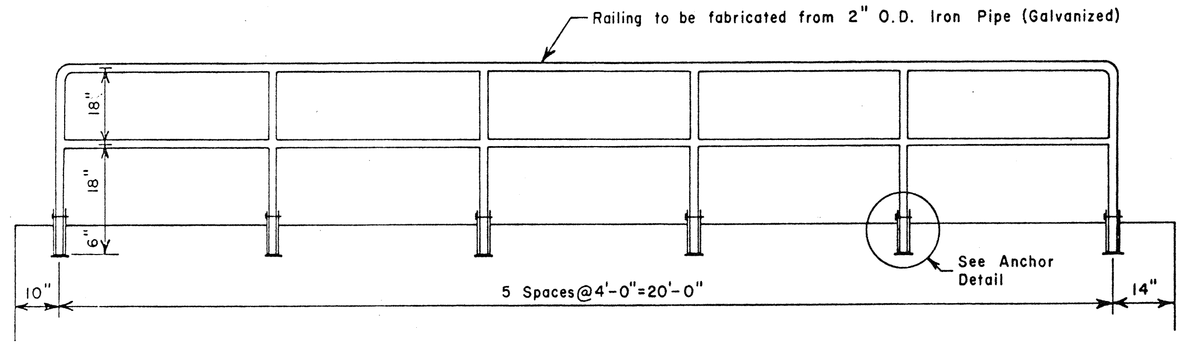

SECTION A-A, HAND RAILING
TYPICAL EACH SIDE
Scale: 1"=2'-0"

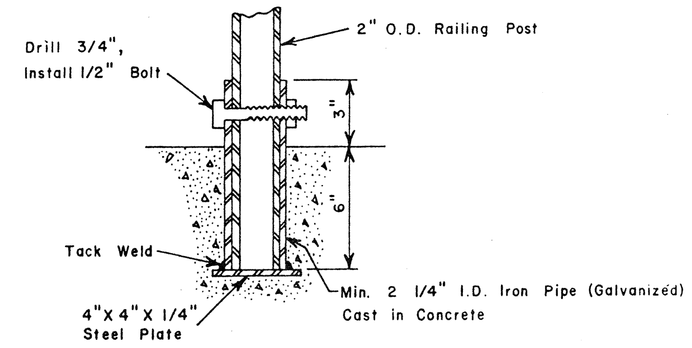

RAILING ANCHOR DETAIL—TYPICAL EACH SIDE
NO SCALE

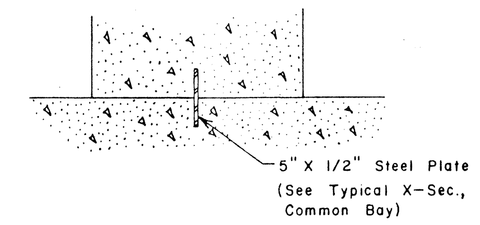

INTRA-BAY CONSTRUCTION JOINT
NO SCALE

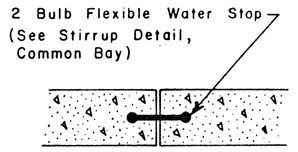

INTER-BAY CONSTRUCTION JOINT
NO SCALE

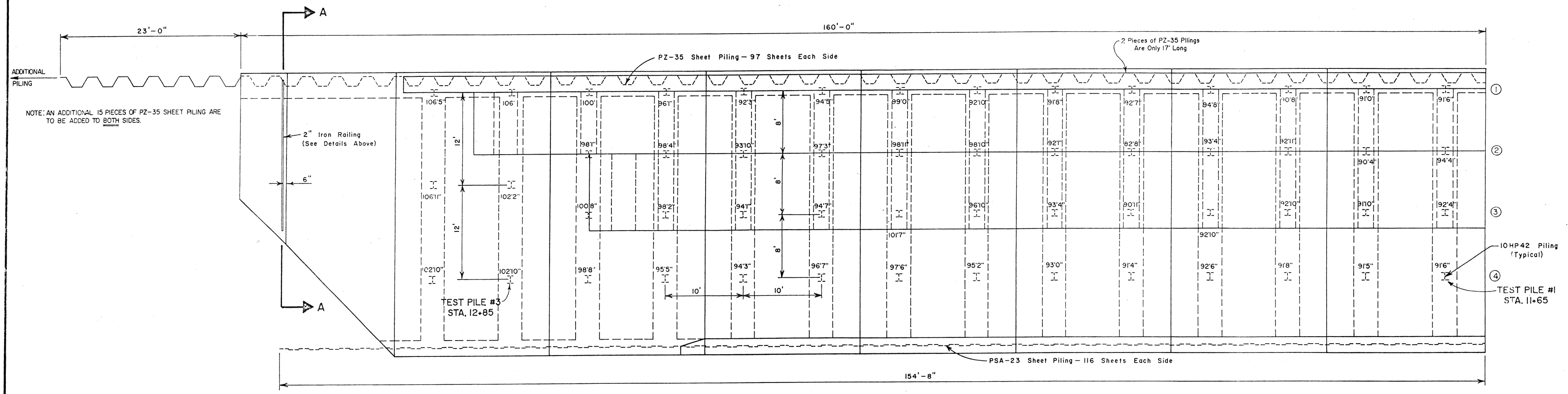

1/2 PLAN LAYOUT
Scale: 1"=6'-0"

1-10-90

SHEET 7 OF 19

C.O.E. DRAWING NO. R-P-GF-364/007

NORTH DAKOTA
STATE WATER COMMISSION
BISMARCK, NORTH DAKOTA

PROJECT NO. 520-2

GRAND FORKS
RIVERSIDE PARK DAM

1/2 PLAN LAYOUT & MISCELLANEOUS DETAILS

COUNTY GRAND FORKS DATE 1-26-88
SURVEYED: CHECKED BY: SUBMITTED:
DRAWN: T.S.P., D.G.D. DESIGNED BY: R.A.S. APPROVED:
DRAWING NO. 9605-520-2-16-AB SCALE As

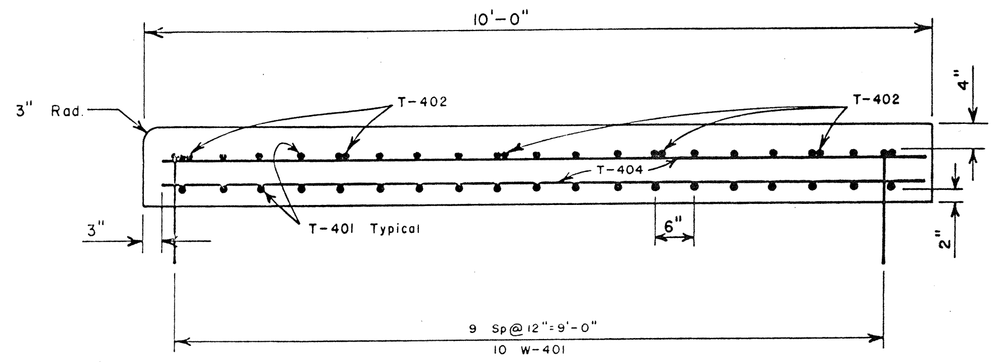

TREAD STEEL DETAIL

Scale 3/4"=1'-0"

NOTE:

8'-0" Tread has the same Bar pattern as the 10'-0" Tread shown. Both Treads have Two layers of Steel.

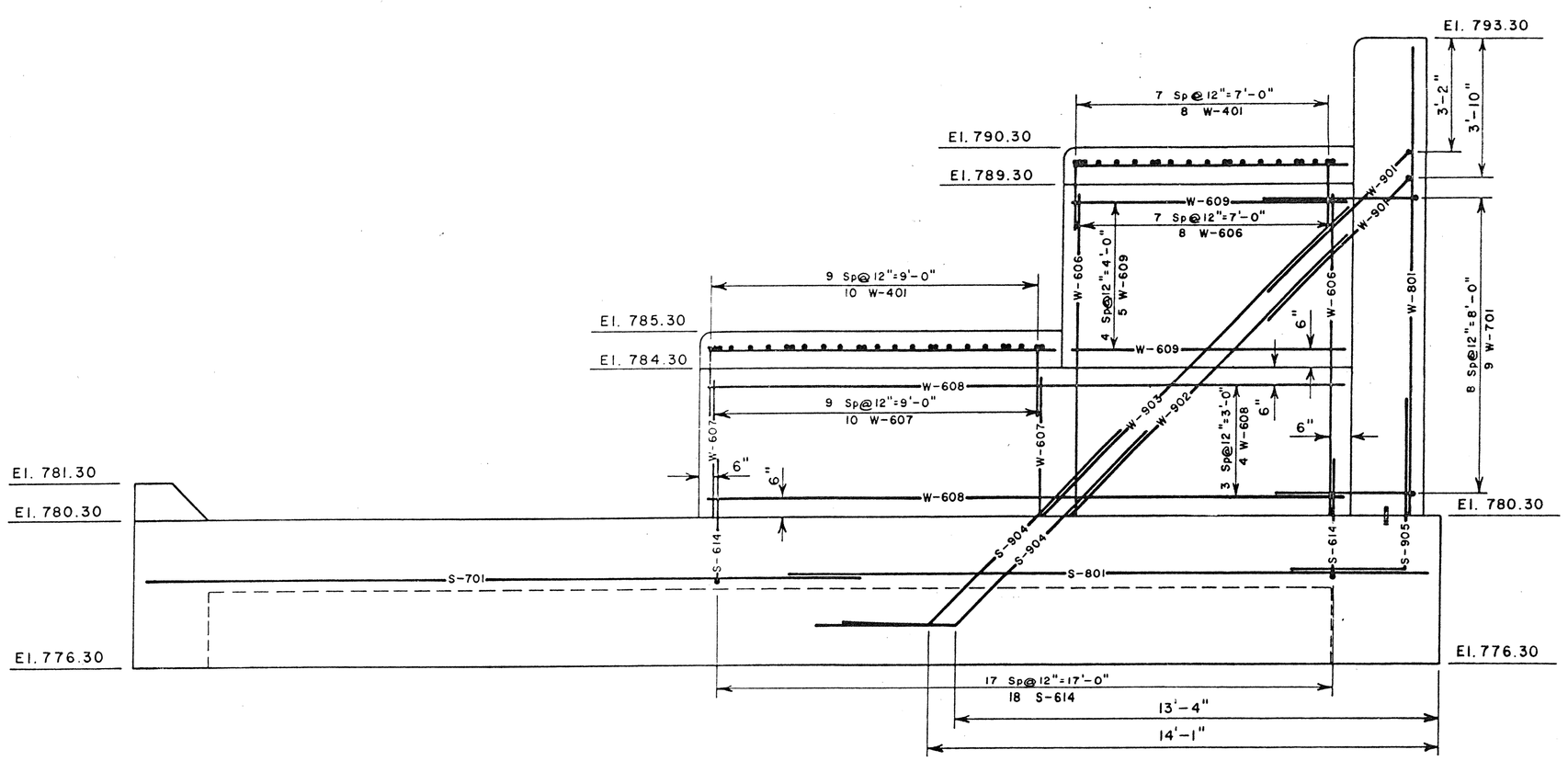

BUTTRESS AND TREAD STEEL

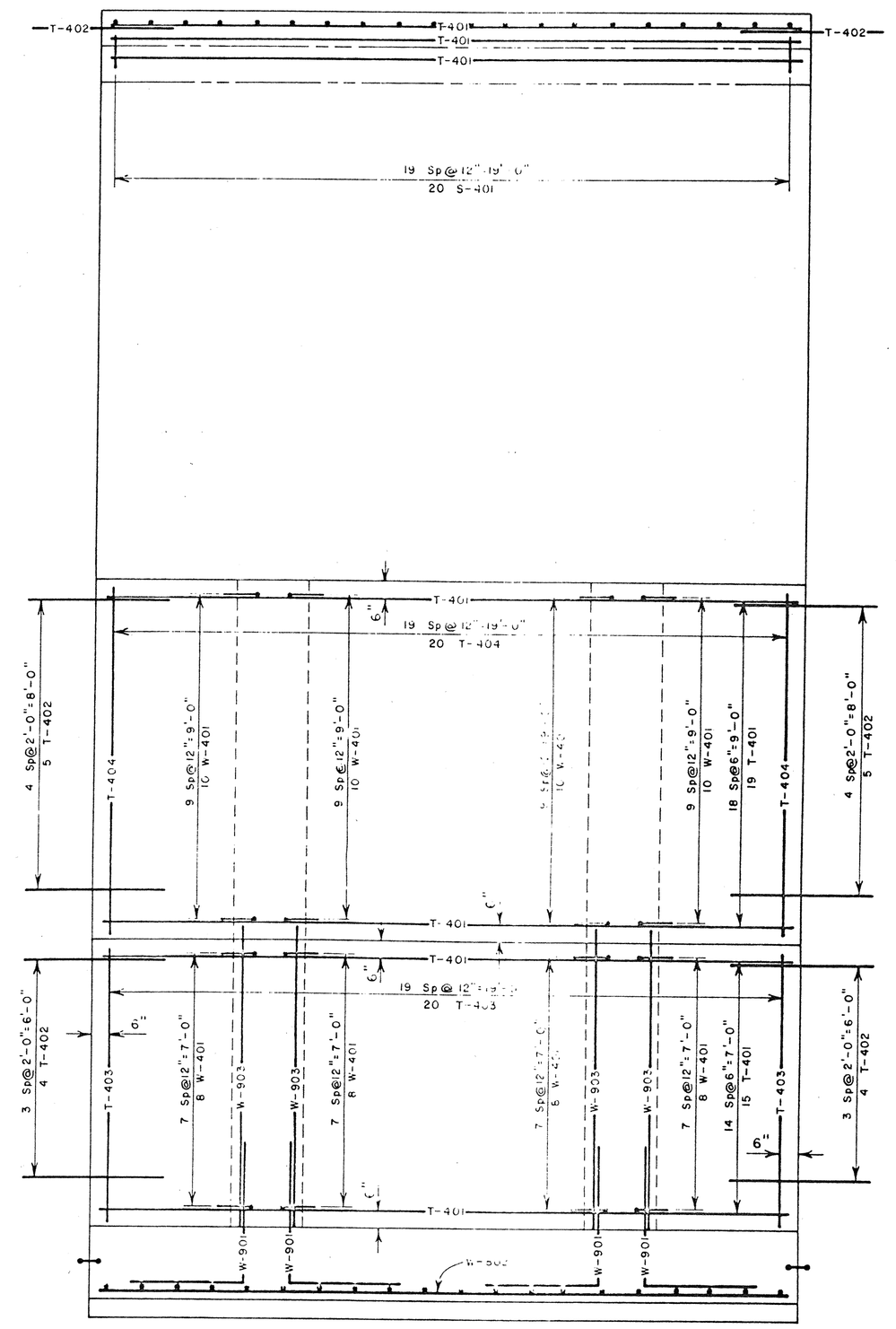

UPPER TREAD & END SILL STEEL

C.O.E. DRAWING NO. R-P-GF-364/008

SHEET 11 OF 19

NORTH DAKOTA
STATE WATER COMMISSION
BISMARCK, NORTH DAKOTA

PROJECT NO. 520-2

GRAND FORKS
RIVERSIDE PARK DAM

BUTTRESS AND TREAD STEEL
COMMON BAY

COUNTY GRAND FORKS DATE 1-15-8

SURVEYED: CHECKED BY: SUBMITTED:
DRAWN: D.G.D. DESIGNED BY: R.A.S. APPROVED:

DRAWING NO. 9609-520-2 20-AB

ACS
1-10-90

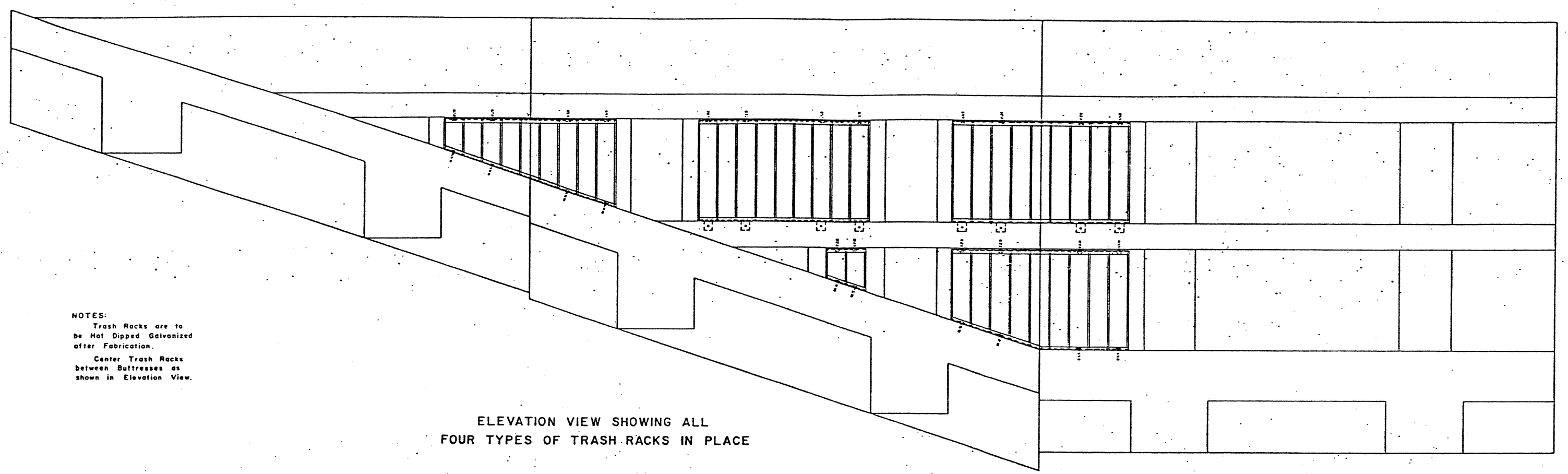

NOTES:

Trash Racks are to be Hot Dipped Galvanized after Fabrication.

Center Trash Racks between Buttresses as shown in Elevation View.

ELEVATION VIEW SHOWING ALL FOUR TYPES OF TRASH RACKS IN PLACE

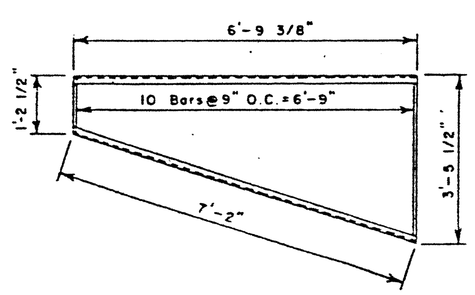

TYPE "C" TRASH RACK – 2 PLACES

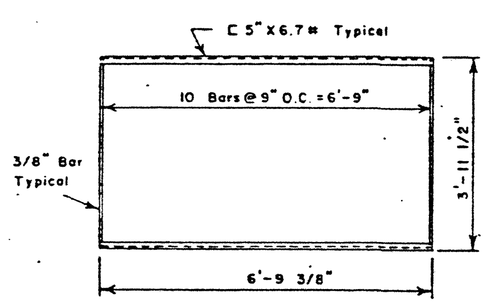

TYPE "A" TRASH RACK – 42 PLACES

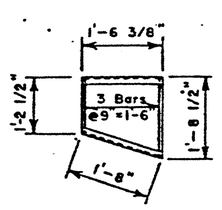

TYPE "D" TRASH RACK 2 PLACES

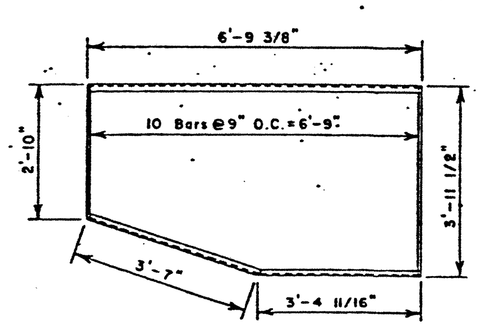

TYPE "B" TRASH RACK – 2 PLACES

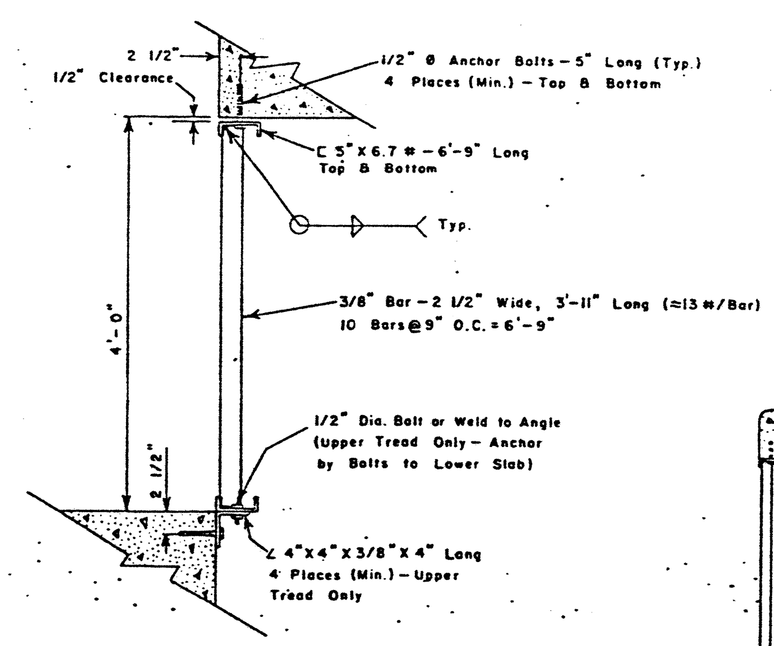

TYPICAL SECTION – 42 PLACES

Scale: 1" = 1'-0"

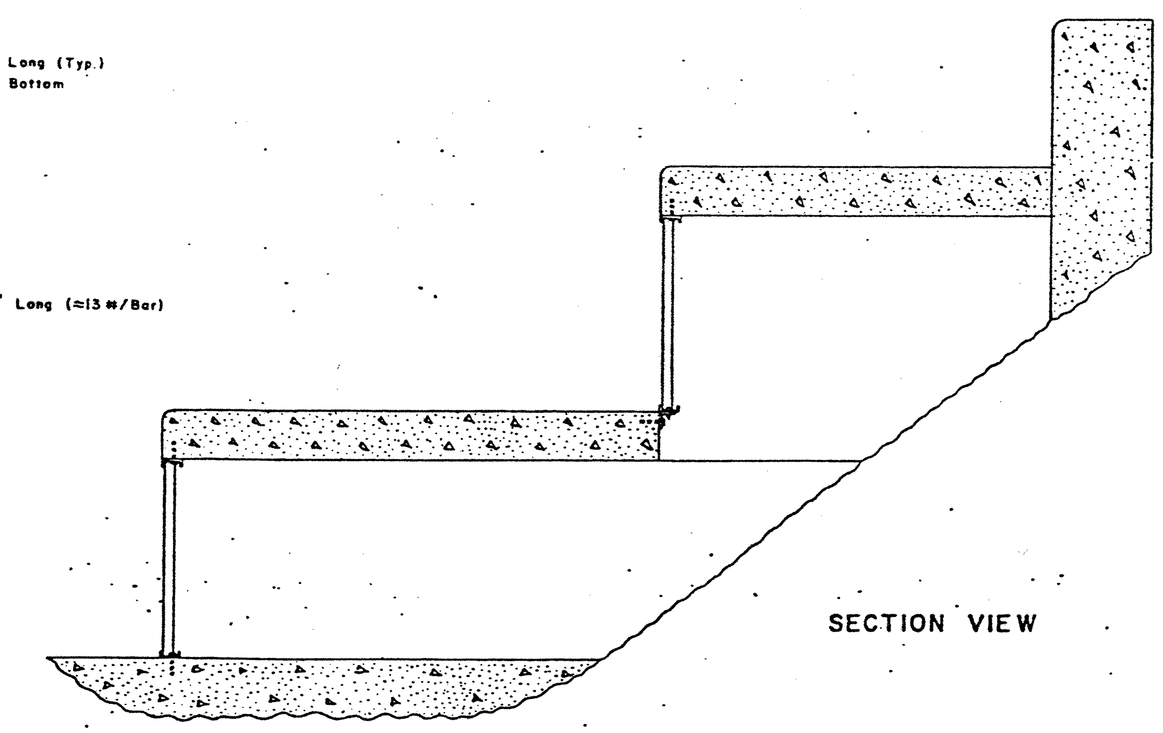

SECTION VIEW

C.O.E. DRAWING NO. R-P-GF-364/009

SHEET 18 OF 19

NORTH DAKOTA
STATE WATER COMMISSION
BISMARCK, NORTH DAKOTA

PROJECT NO. 520-2

GRAND FORKS
RIVERSIDE PARK DAM
TRASH RACK DETAILS

COUNTY GRAND FORKS DATE 3-21-88

SURVEYED: CHECKED BY: SUBMITTED:
DRAWN: D.G.D. DESIGNED BY: W.A.H. APPROVED:

DRAWING NO. 9616-520-2-27 SCALE 1/2" = 1'-0"

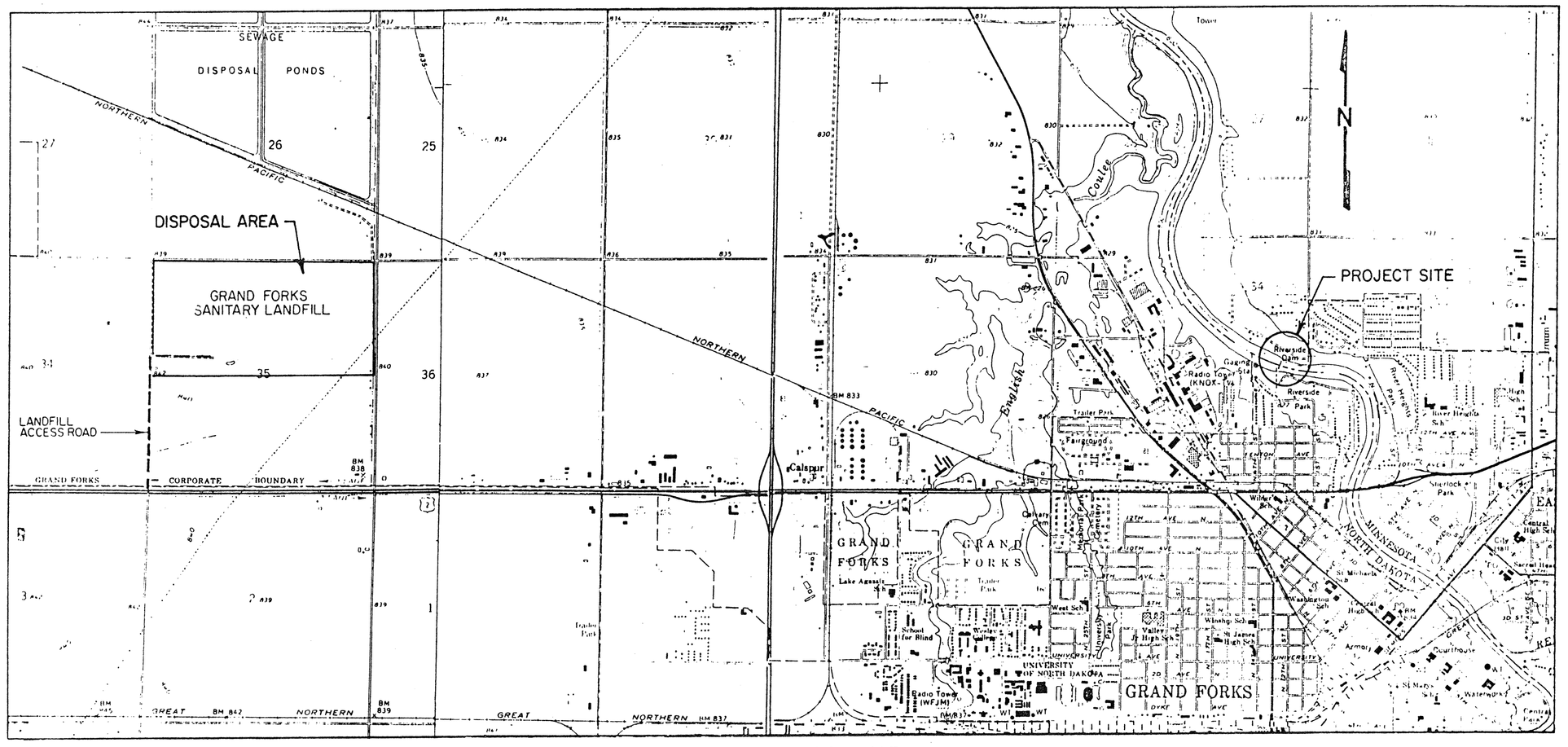

PROJECT LOCATION MAP
SCALE: 1"=2000'

NOTE:
Unless otherwise specified, all unsuitable or waste materials removed during excavation, clearing and grubbing, stripping topsoil, demolition of the old dam, clean-up work, site restoration, and any other construction operations shall be disposed of at the "Grand Forks City Sanitary Landfill Area." At location shown above.

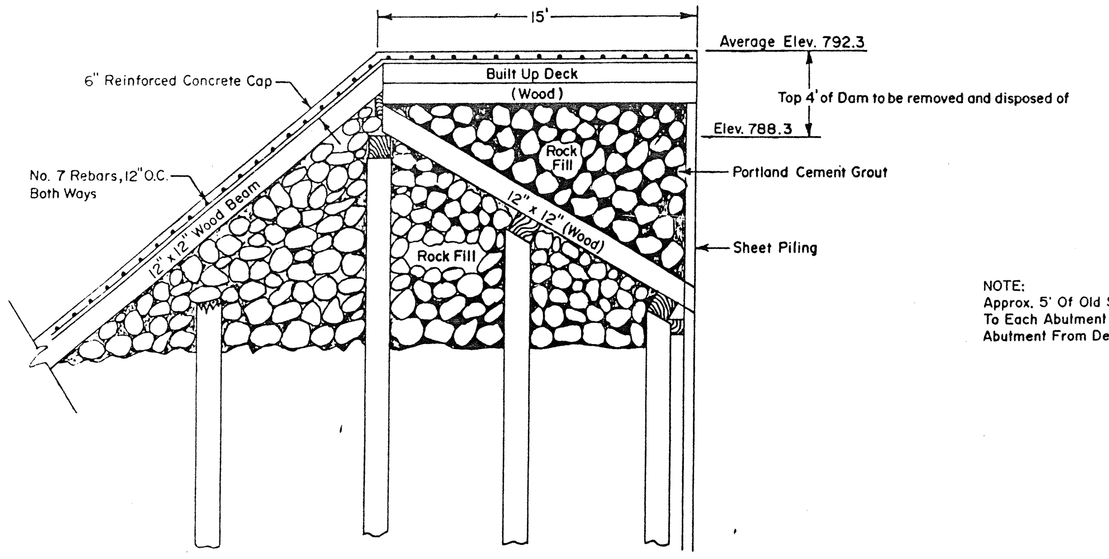

SECTION "A-A"
(TYPICAL)
NO SCALE

NOTE:
Approx. 5' Of Old Structure Was Left Attached To Each Abutment In Order To Save Existing Abutment From Demolition Damages.

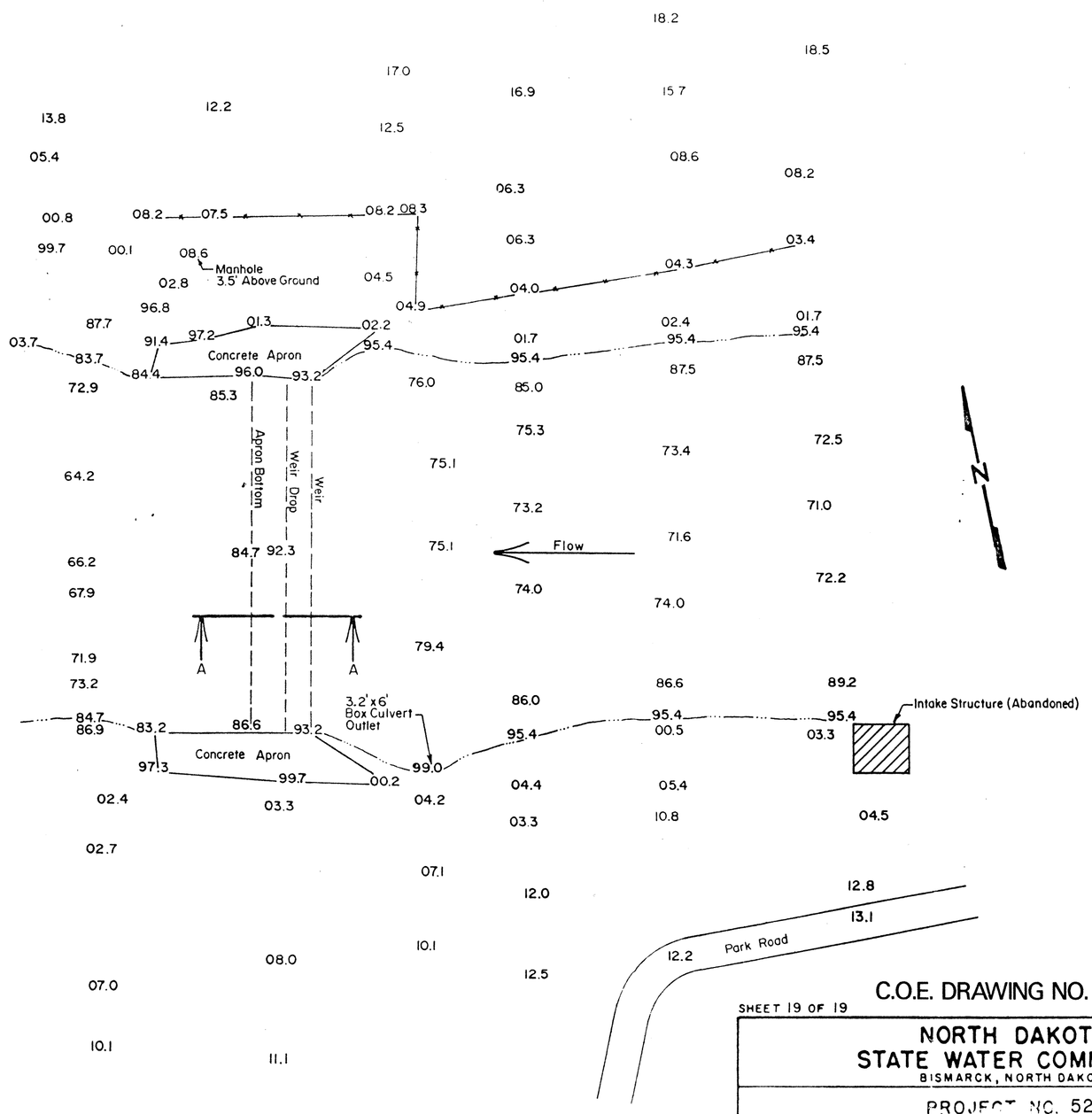

PLAN VIEW
EXISTING STRUCTURE
SCALE: 1"=50'

C.O.E. DRAWING NO. R-P-GF-364/010

SHEET 19 OF 19

NORTH DAKOTA
STATE WATER COMMISSION
BISMARCK, NORTH DAKOTA

PROJECT NO. 520-2

GRAND FORKS
RIVERSIDE PARK DAM

DEMOLITION, REMOVAL AND
DISPOSAL OF TOP 4 FOOT OF EXIST NG DAM

COUNTY GRAND FORKS DATE -21-88

SURVEYED: CHECKED BY: SUBMITTED:
DRAWN: T.S.P. DESIGNED BY: R.A.S. APPROVED:

DRAWING NO. 9617-520-2-28 SC E: As Shown

1-12-90

NOTES:

1. THE HYDROGRAPHS ARE BASED ON OBSERVED MEAN DAILY FLOWS AS RECORDED BY THE U. S. GEOLOGICAL SURVEY GAGING STATION FOR THE RED RIVER OF THE NORTH AT GRAND FORKS, NORTH DAKOTA, GAGE NUMBER 05082500, WITH 95 YEARS OF RECORD (1904-1998). THE DRAINAGE AREA OF THE RED RIVER IS ABOUT 30,100 SQUARE MILES AT THE GRAND FORKS GAGE SITE AND IS NOT SIGNIFICANTLY DIFFERENT AT THE PROJECT LOCATIONS.

2. THESE HYDROGRAPHS REPRESENT THE BEST INFORMATION AVAILABLE. QUESTIONS MAY BE ADDRESSED TO THE OFFICE OF THE CORPS OF ENGINEERS, ST. PAUL, MINNESOTA.

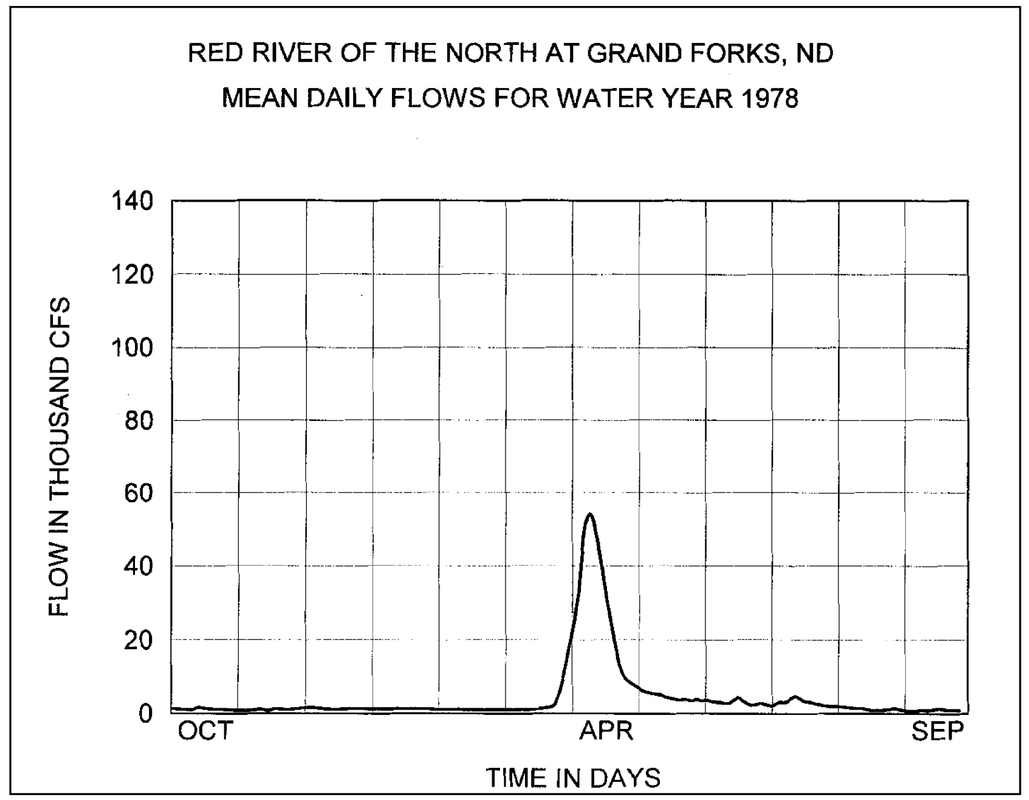

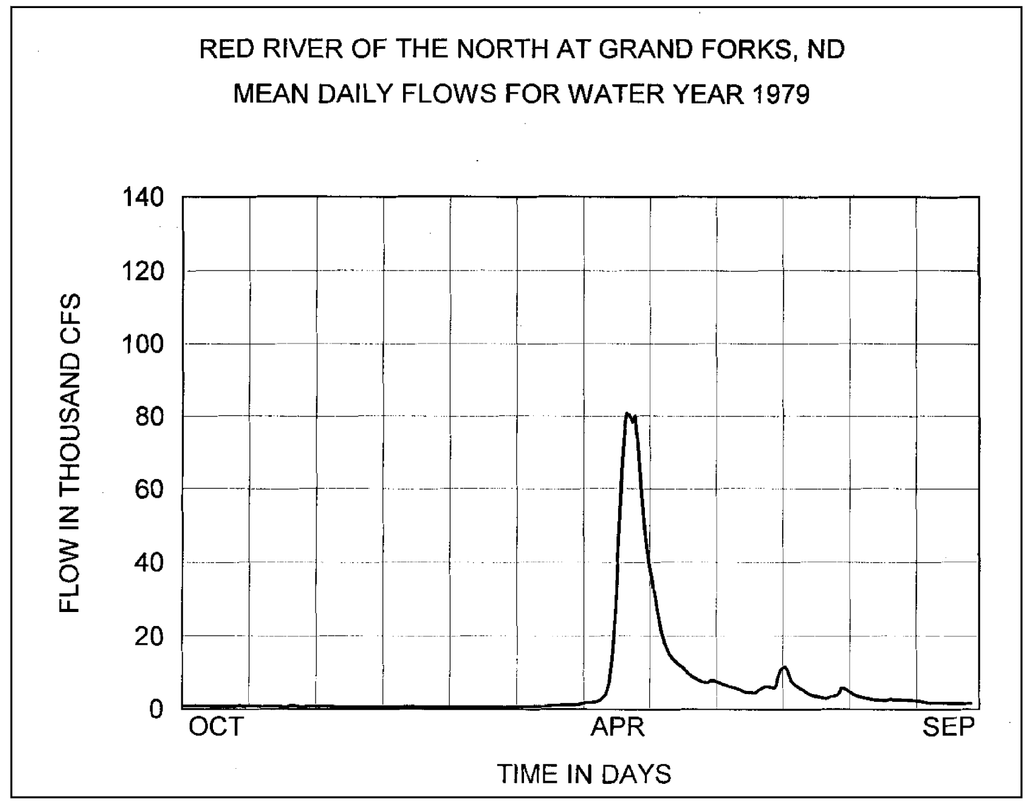

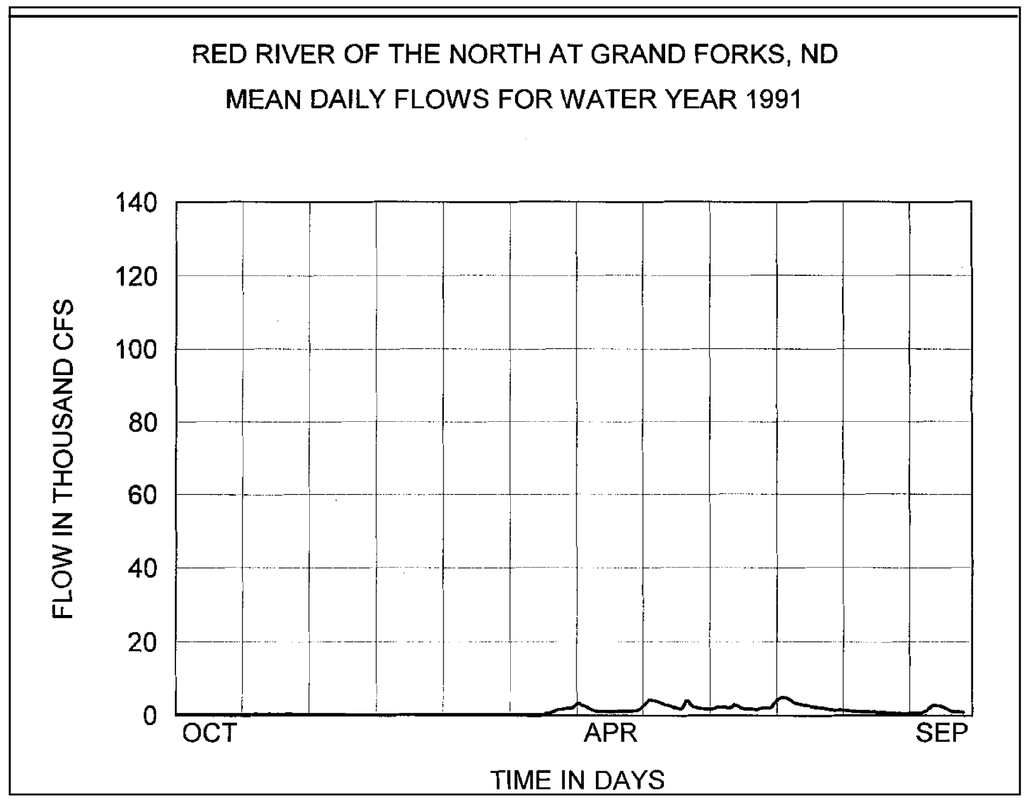

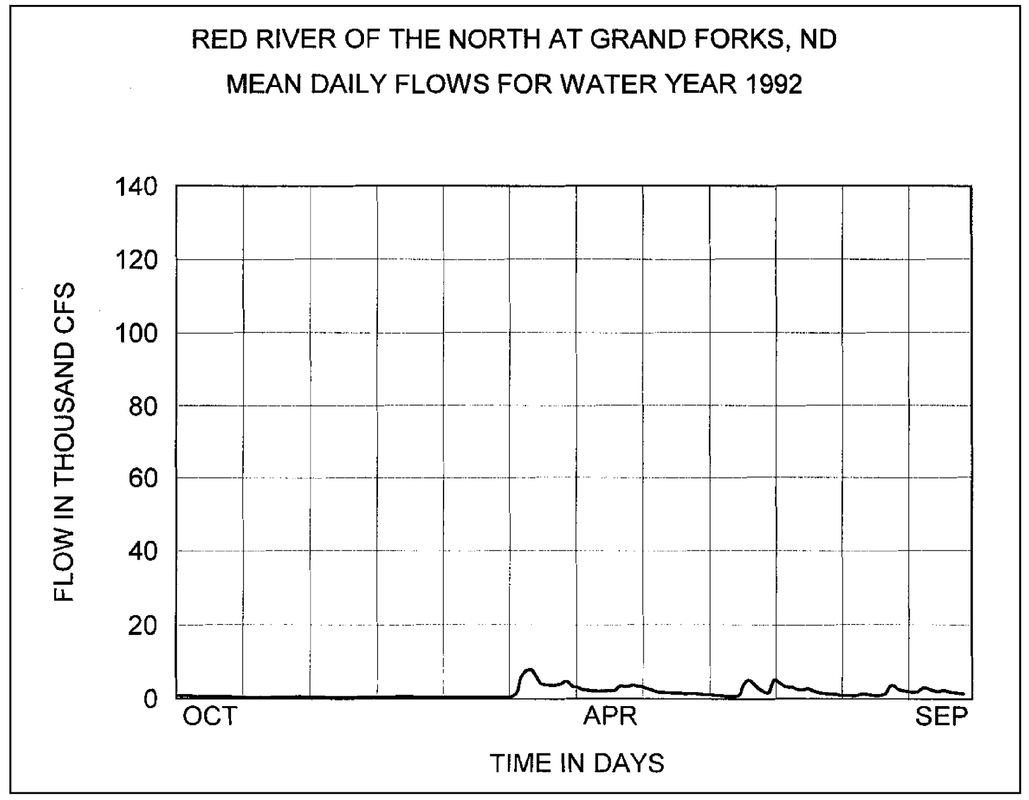

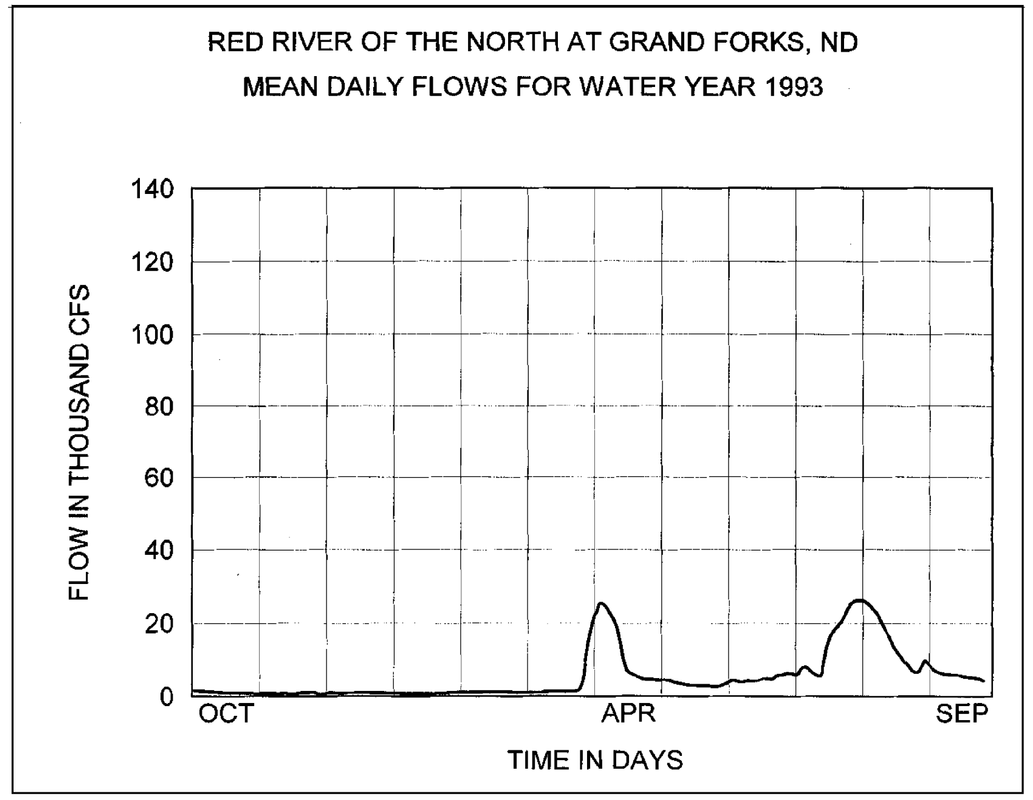

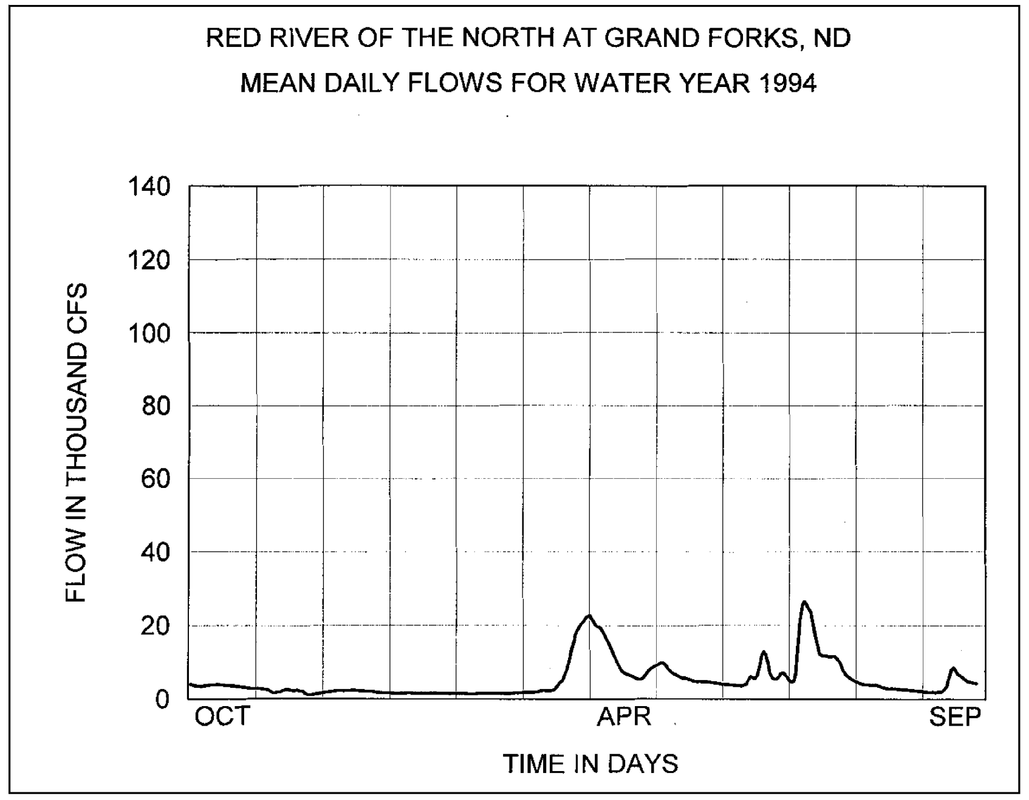

US Army Corps of Engineers
St. Paul District

Symbol	Description	Date	Appr.

DESIGNED: SCALE: AS SHOWN DATE: JAN. 2000
CHECKED: CADD FILE NAME: GF14T002.DGN
DRAWN: SKM SOL. NO:
DESIGNED: TRZ APPROVING OFFICIAL:
CHECKED: TRZ

DEPARTMENT OF THE ARMY
ST. PAUL, MINNESOTA
CORPS OF ENGINEERS
ST. PAUL DISTRICT

BANK STABILIZATION RIVERSIDE DAM
HYDROGRAPHIC DATA
HYDROGRAPHS
OCTOBER - SEPTEMBER
(1978-1979, 1991-1994)

DRAWING NUMBER:
R-P-GF-14/002

SHT 1 OF 4

NOTES:

1. THE HYDROGRAPHS ARE BASED ON OBSERVED MEAN DAILY FLOWS AS RECORDED BY THE U. S. GEOLOGICAL SURVEY GAGING STATION FOR THE RED RIVER OF THE NORTH AT GRAND FORKS, NORTH DAKOTA, GAGE NUMBER 05082500, WITH 95 YEARS OF RECORD (1904-1998). THE DRAINAGE AREA OF THE RED RIVER IS ABOUT 30,100 SQUARE MILES AT THE GRAND FORKS GAGE SITE AND IS NOT SIGNIFICANTLY DIFFERENT AT THE PROJECT LOCATIONS.

2. THESE HYDROGRAPHS REPRESENT THE BEST INFORMATION AVAILABLE. QUESTIONS MAY BE ADDRESSED TO THE OFFICE OF THE CORPS OF ENGINEERS, ST. PAUL, MINNESOTA.

3. THESE RATING CURVES REPRESENT THE BEST INFORMATION AVAILABLE. QUESTIONS MAY BE ADDRESSED TO THE OFFICE OF THE CORPS OF ENGINEERS, ST. PAUL, MINNESOTA.

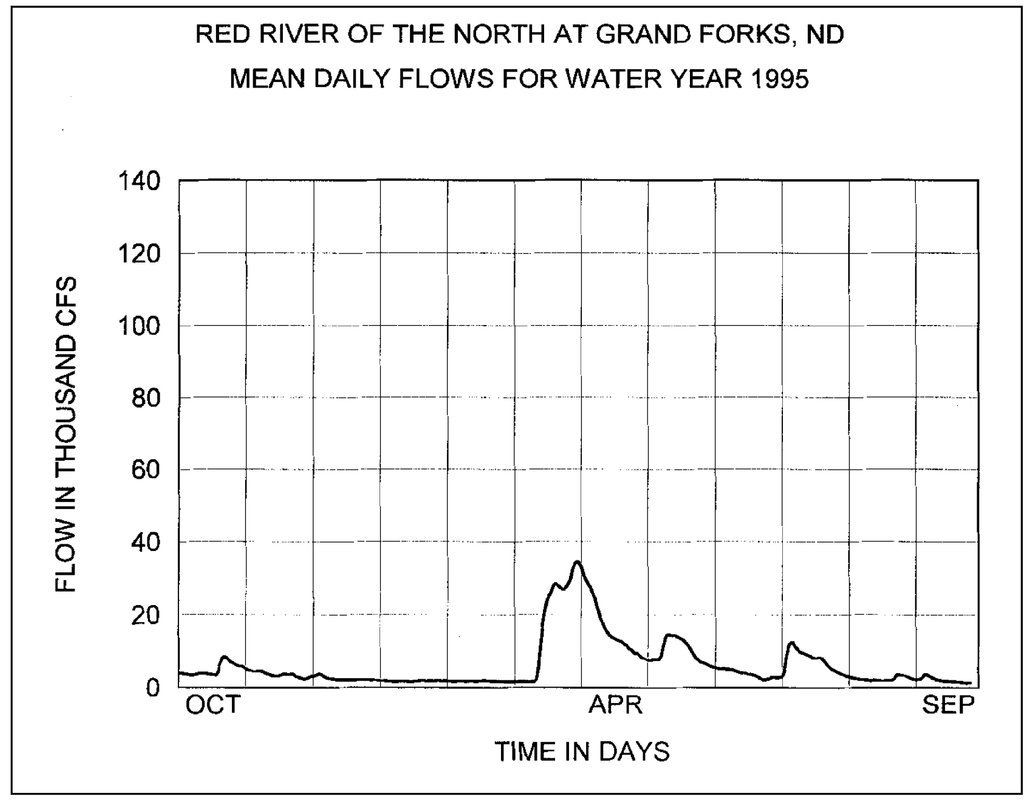

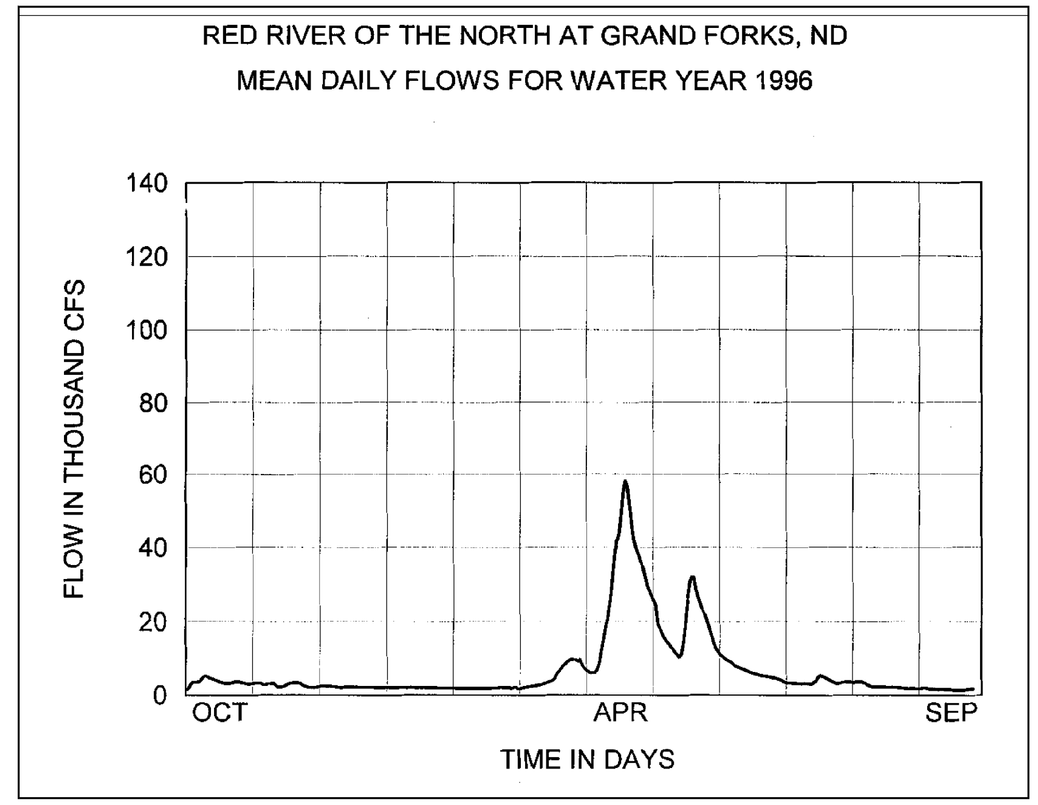

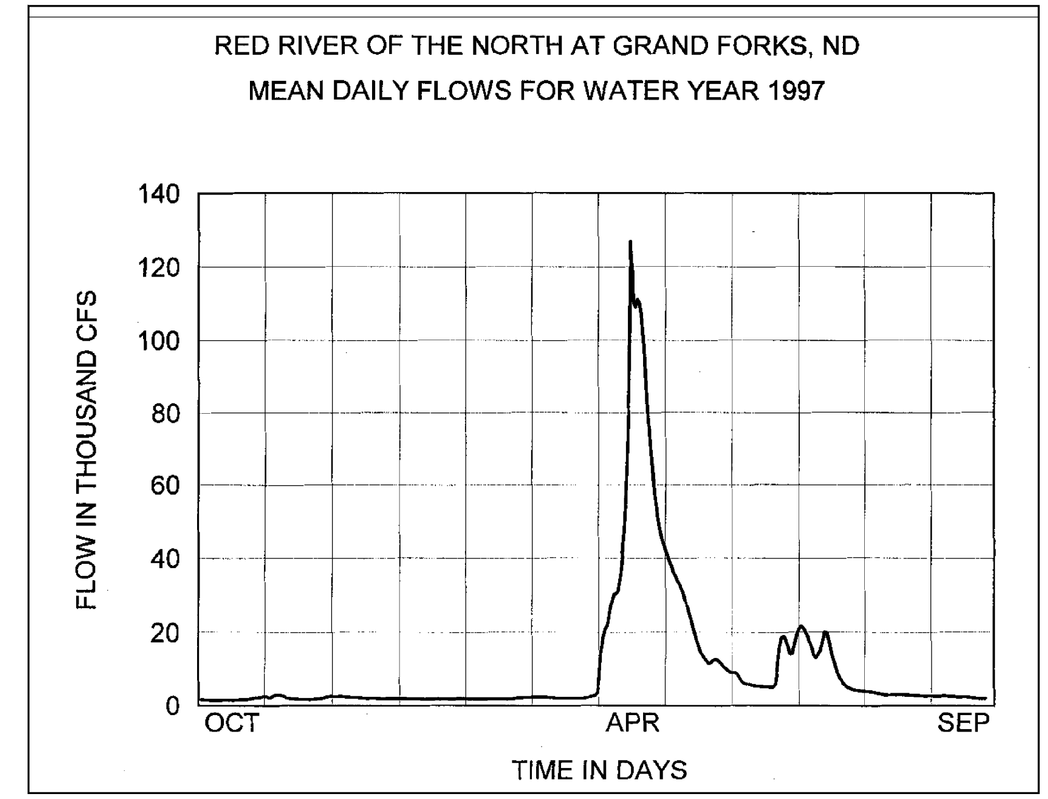

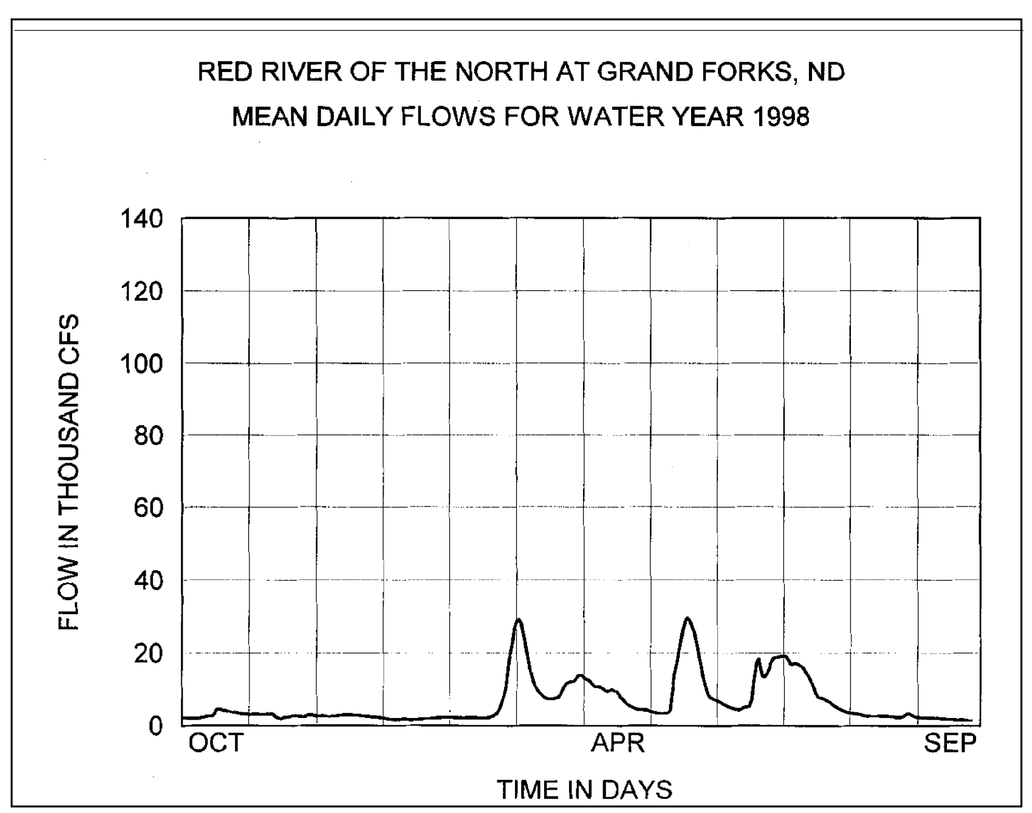

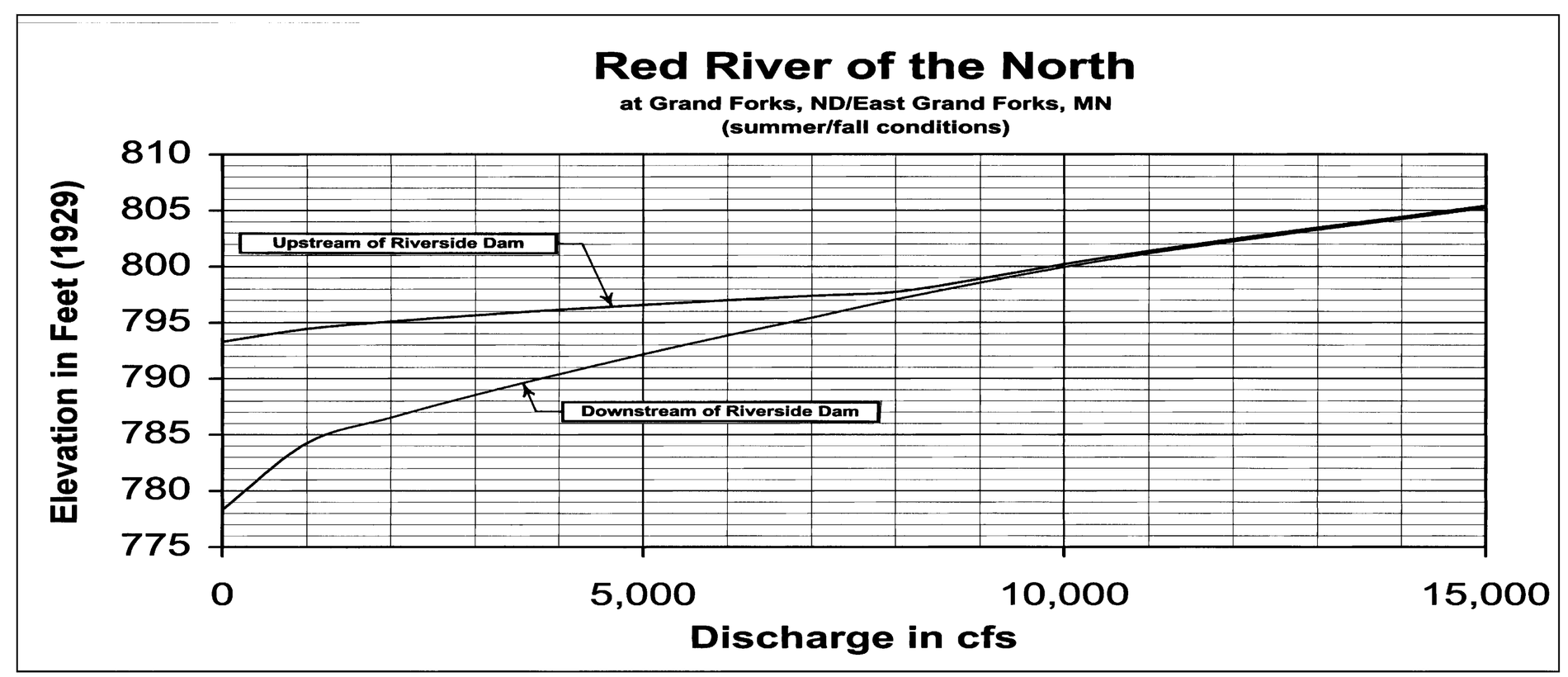

US Army Corps of Engineers
St. Paul District

Symbol	Description	Date	Appr.

DESIGNED: ED-D
CHECKED: ED
DRAWN: SKM
DESIGNED: TRZ/MDL
CHECKED: TRZ/MDL
SCALE: AS SHOWN
DATE: JAN. 2000
CADD FILE NAME: GF14T003.DGN
SOL. NO:
AE APPROVING OFFICIAL: ED-H

DEPARTMENT OF THE ARMY
ST. PAUL, MINNESOTA
CORPS OF ENGINEERS
ST. PAUL DISTRICT

BANK STABILIZATION RIVERSIDE DAM

HYDROGRAPHIC DATA

HYDROGRAPHS & RATING CURVES
OCTOBER - SEPTEMBER
(1995-1998)

DRAWING NUMBER:
R-P-GF-14/003

SHT 2 OF 4

NOTES:

1. THE DURATION CURVES ARE BASED ON OBSERVED MEAN DAILY FLOWS AS RECORDED BY THE U. S. GEOLOGICAL SURVEY GAGING STATION FOR THE RED RIVER OF THE NORTH AT GRAND FORKS, NORTH DAKOTA, GAGE NUMBER 05082500, WITH 95 YEARS OF RECORD (1904-1998) . THE DRAINAGE AREA OF THE RED RIVER IS ABOUT 30,100 SQUARE MILES AT THE GRAND FORKS GAGE SITE AND IS NOT SIGNIFICANTLY DIFFERENT AT THE PROJECT LOCATIONS.

2. THESE DURATION CURVES REPRESENT THE BEST INFORMATION AVAILABLE. QUESTIONS MAY BE ADDRESSED TO THE OFFICE OF THE CORPS OF ENGINEERS, ST. PAUL, MINNESOTA.

RED RIVER OF THE NORTH AT GRAND FORKS, ND
FLOW DURATION CURVE FOR JANUARY

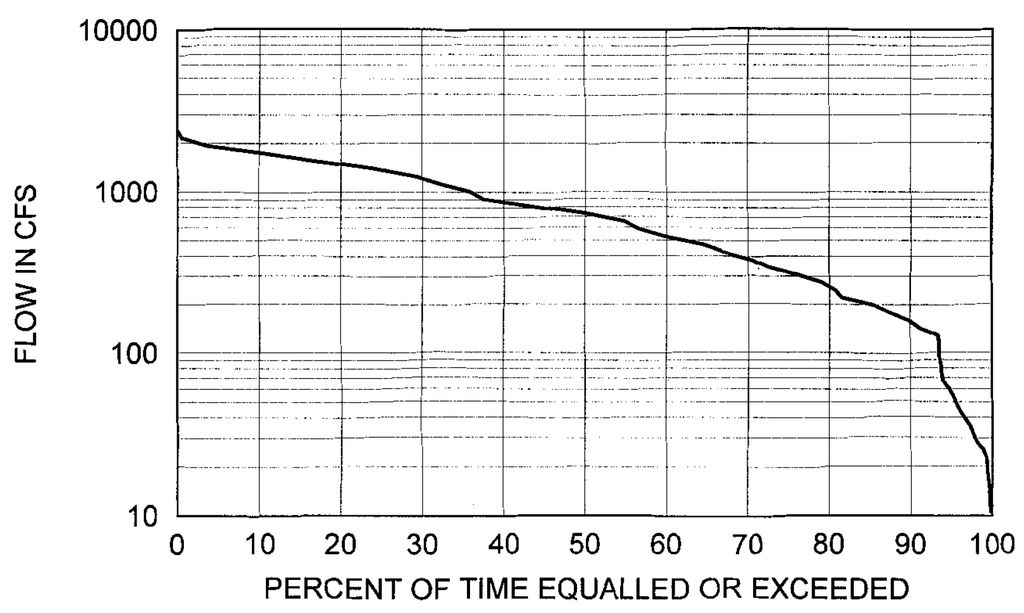

RED RIVER OF THE NORTH AT GRAND FORKS, ND
FLOW DURATION CURVE FOR FEBRUARY

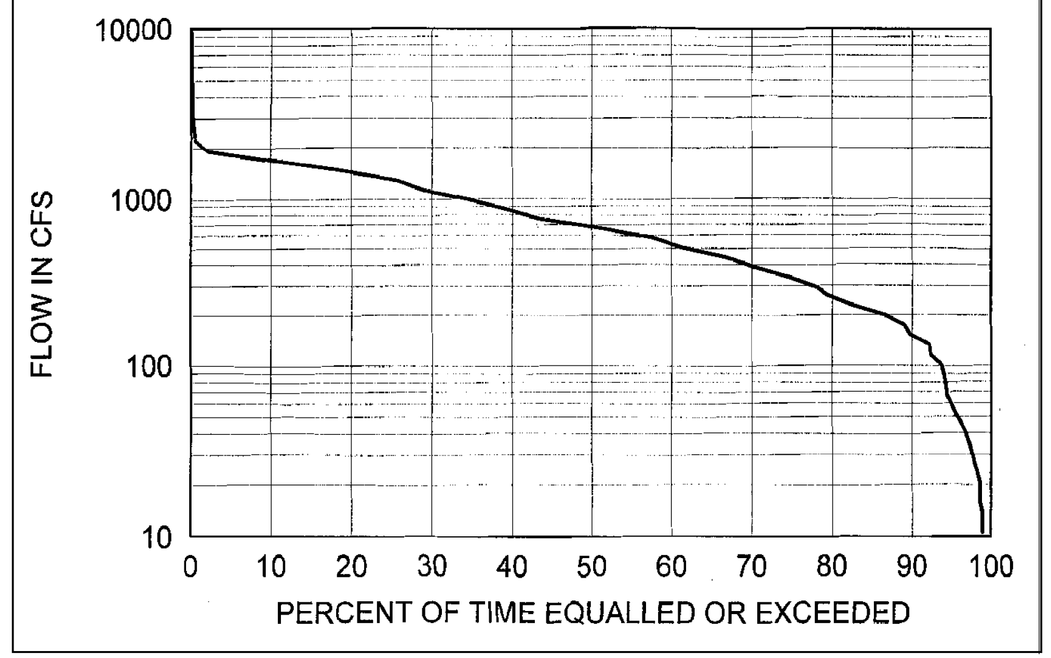

RED RIVER OF THE NORTH AT GRAND FORKS, ND
FLOW DURATION CURVE FOR MARCH

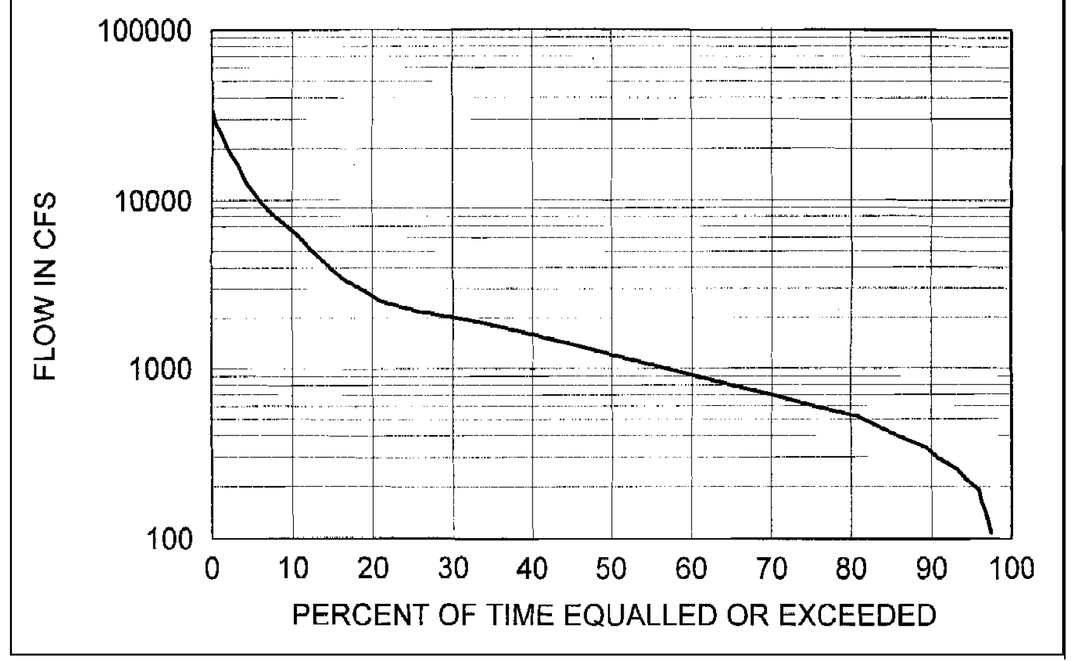

RED RIVER OF THE NORTH AT GRAND FORKS, ND
FLOW DURATION CURVE FOR APRIL

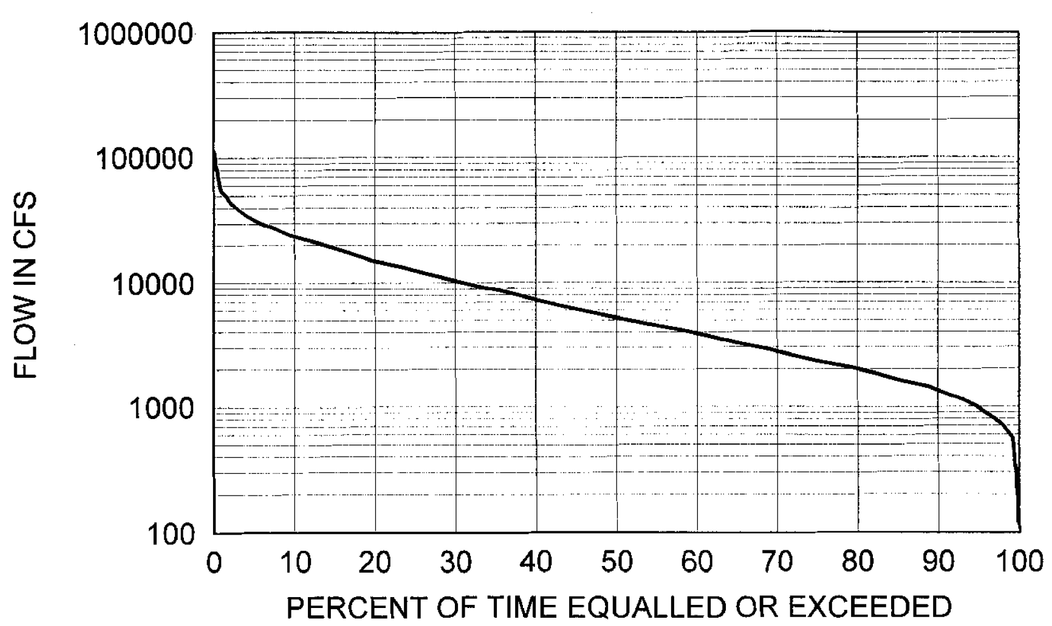

RED RIVER OF THE NORTH AT GRAND FORKS, ND
FLOW DURATION CURVE FOR MAY

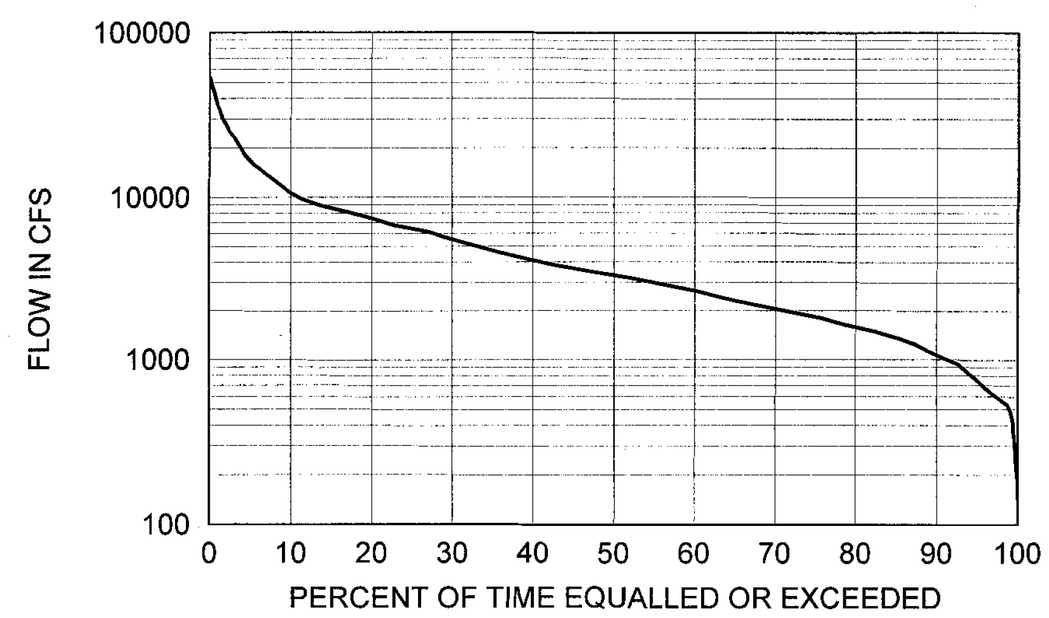

RED RIVER OF THE NORTH AT GRAND FORKS, ND
FLOW DURATION CURVE FOR JUNE

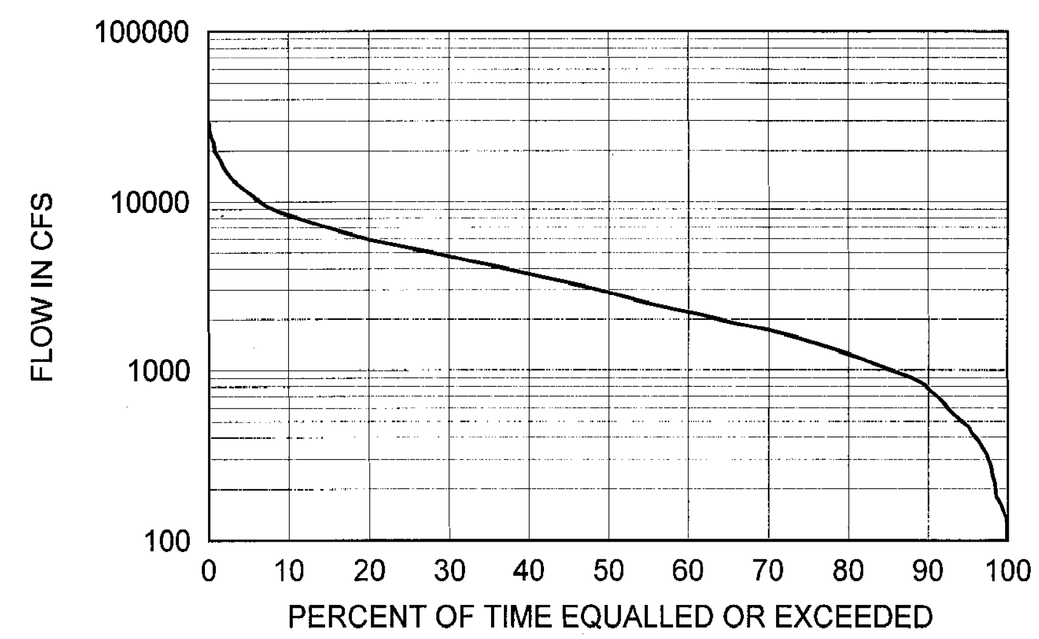

US Army Corps of Engineers
St. Paul District

Symbol	Description	Date	Appr.

DESIGNED: ED-D
CHECKED:
DRAWN: SKM
DESIGNED: TRZ
CHECKED: TRZ
SCALE: AS SHOWN
DATE: JAN. 2000
CADD FILE NAME: GF14T004.DGN
SOL. NO:
ED-H
AE APPROVING OFFICIAL:

DEPARTMENT OF THE ARMY
ST. PAUL, MINNESOTA
CORPS OF ENGINEERS
ST. PAUL DISTRICT

BANK STABILIZATION RIVERSIDE DAM
HYDROGRAPHIC DATA
DISCHARGE DURATION CURVES
JANUARY - JUNE (1904 - 1998)

DRAWING NUMBER:
R-P-GF-14/004

SHT 3 OF 4

NOTES:

1. THE DURATION CURVES ARE BASED ON OBSERVED MEAN DAILY FLOWS AS RECORDED BY THE U. S. GEOLOGICAL SURVEY GAGING STATION FOR THE RED RIVER OF THE NORTH AT GRAND FORKS, NORTH DAKOTA, GAGE NUMBER 05082500, WITH 95 YEARS OF RECORD (1904-1998) . THE DRAINAGE AREA OF THE RED RIVER IS ABOUT 30,100 SQUARE MILES AT THE GRAND FORKS GAGE SITE AND IS NOT SIGNIFICANTLY DIFFERENT AT THE PROJECT LOCATIONS.

2. THESE DURATION CURVES REPRESENT THE BEST INFORMATION AVAILABLE. QUESTIONS MAY BE ADDRESSED TO THE OFFICE OF THE CORPS OF ENGINEERS, ST. PAUL, MINNESOTA.

RED RIVER OF THE NORTH AT GRAND FORKS, ND
FLOW DURATION CURVE FOR JULY

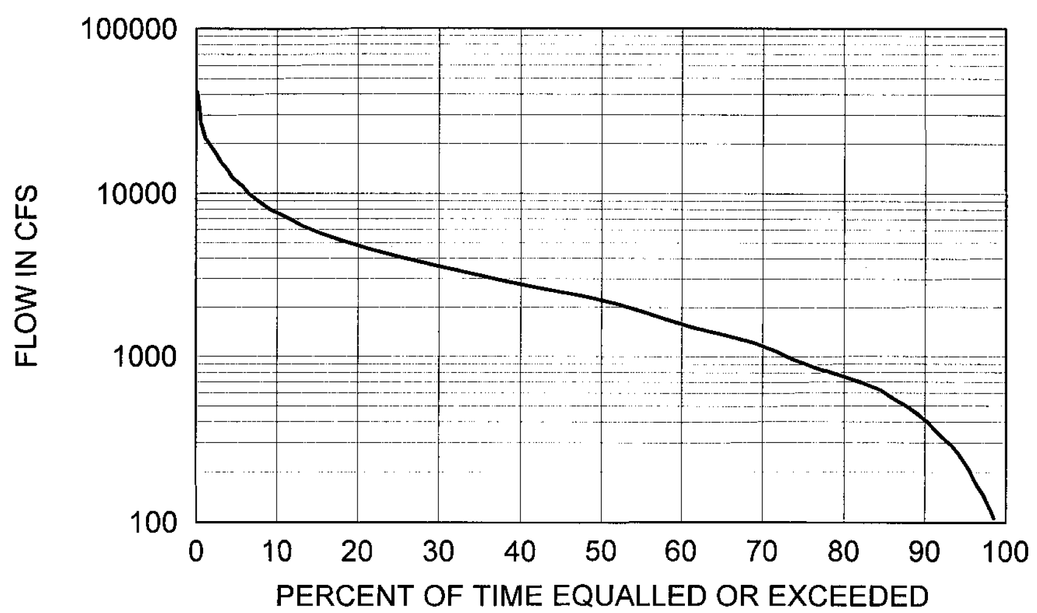

RED RIVER OF THE NORTH AT GRAND FORKS, ND
FLOW DURATION CURVE FOR AUGUST

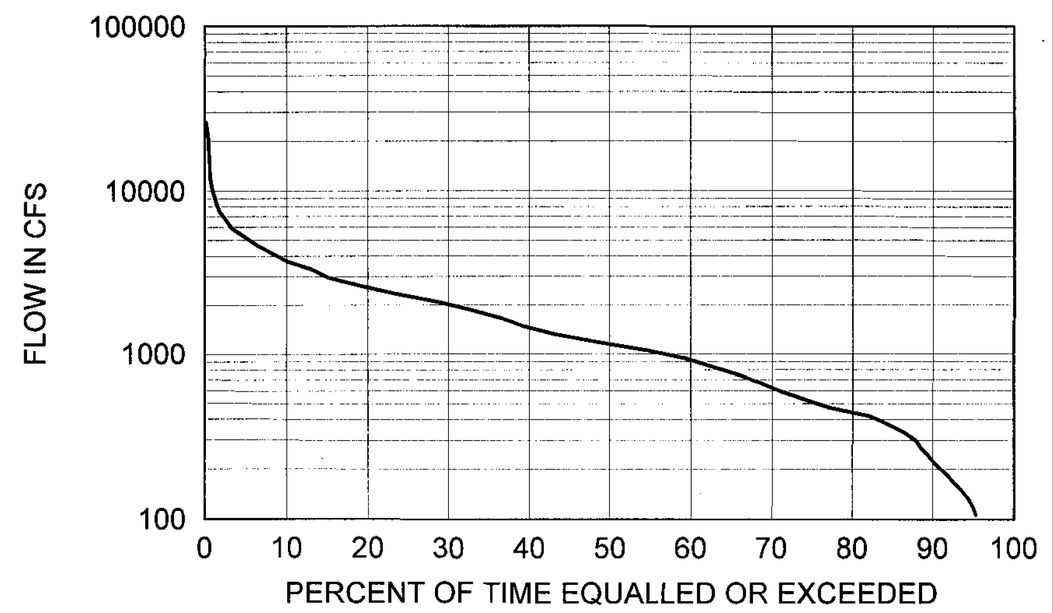

RED RIVER OF THE NORTH AT GRAND FORKS, ND
FLOW DURATION CURVE FOR SEPTEMBER

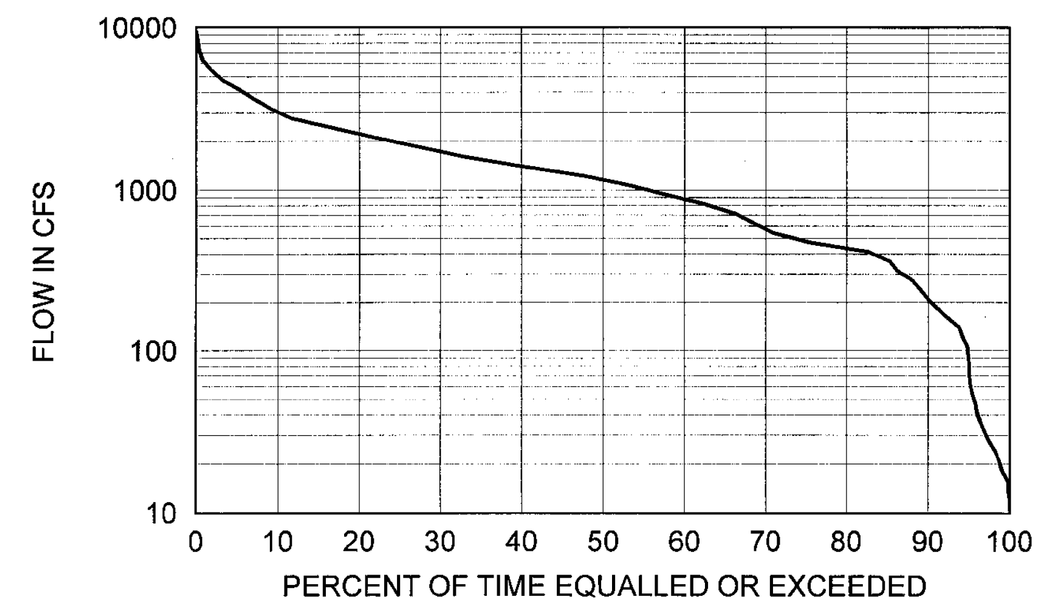

RED RIVER OF THE NORTH AT GRAND FORKS, ND
FLOW DURATION CURVE FOR OCTOBER

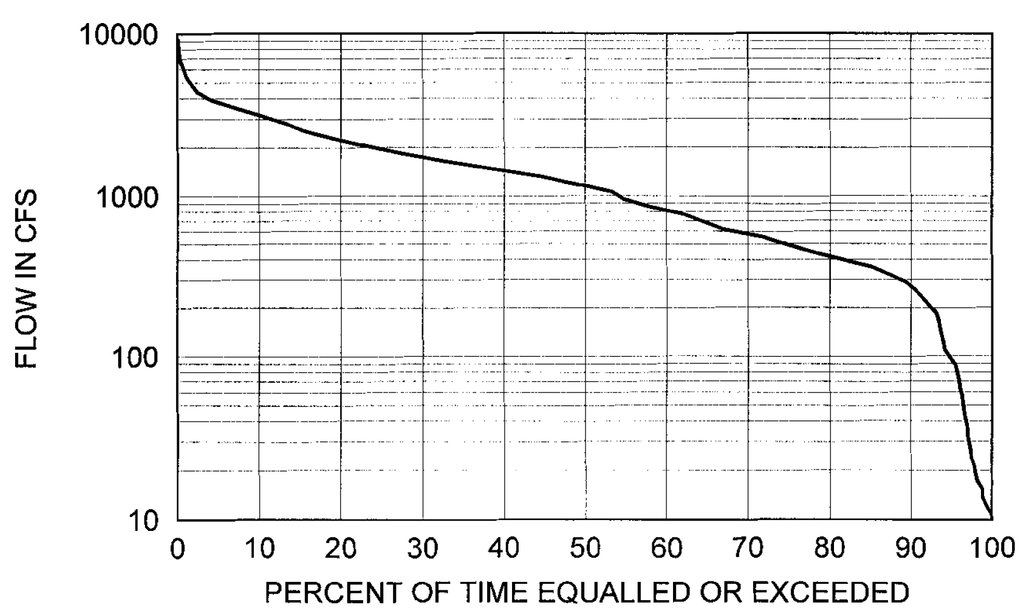

RED RIVER OF THE NORTH AT GRAND FORKS, ND
FLOW DURATION CURVE FOR NOVEMBER

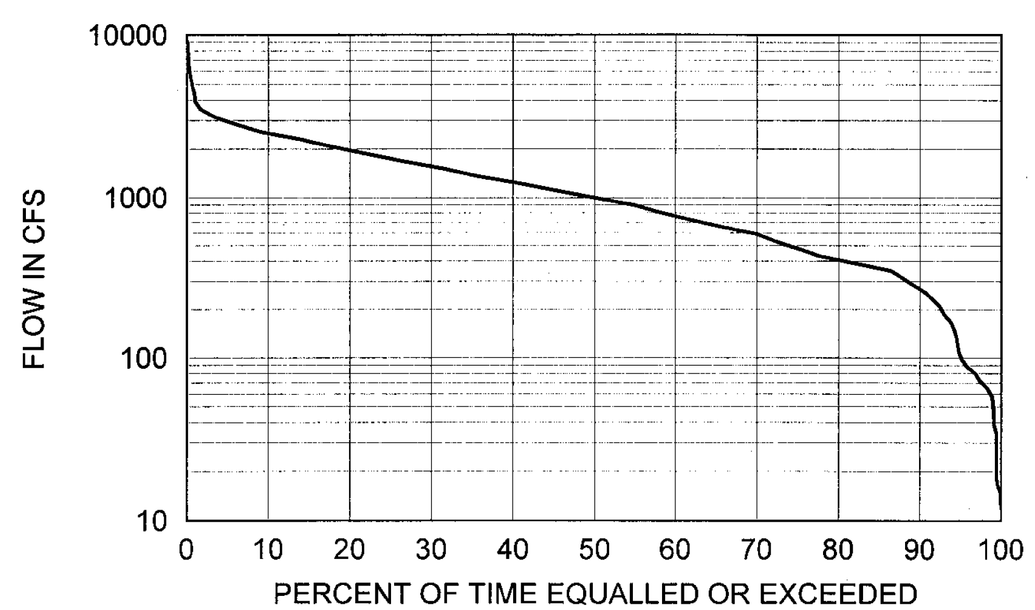

RED RIVER OF THE NORTH AT GRAND FORKS, ND
FLOW DURATION CURVE FOR DECEMBER

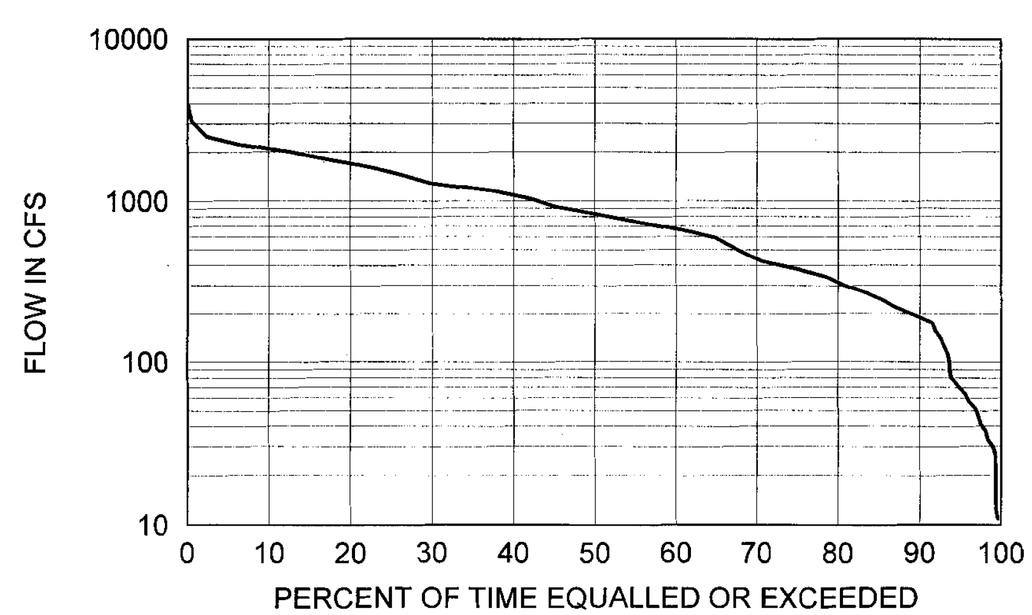

US Army Corps of Engineers
St. Paul District

Symbol	Description	Date	Appr.

DESIGNED: ED-D
CHECKED:
DRAWN: SKM
DESIGNED: ED-H
CHECKED: TRZ
SCALE: AS SHOWN
DATE: JAN. 2000
CADD FILE NAME: GF14100S.DGN
SOL. NO:
AE APPROVING OFFICIAL:

DEPARTMENT OF THE ARMY
ST PAUL, MINNESOTA
CORPS OF ENGINEERS
ST. PAUL DISTRICT

BANK STABILIZATION RIVERSIDE DAM
HYDROGRAPHIC DATA
DISCHARGE DURATION CURVES
JULY - DECEMBER (1904 - 1998)

DRAWING NUMBER:
R-P-GF-14/005

SHT 4 OF 4

85-16M

29 JAN - 07 FEB 1985

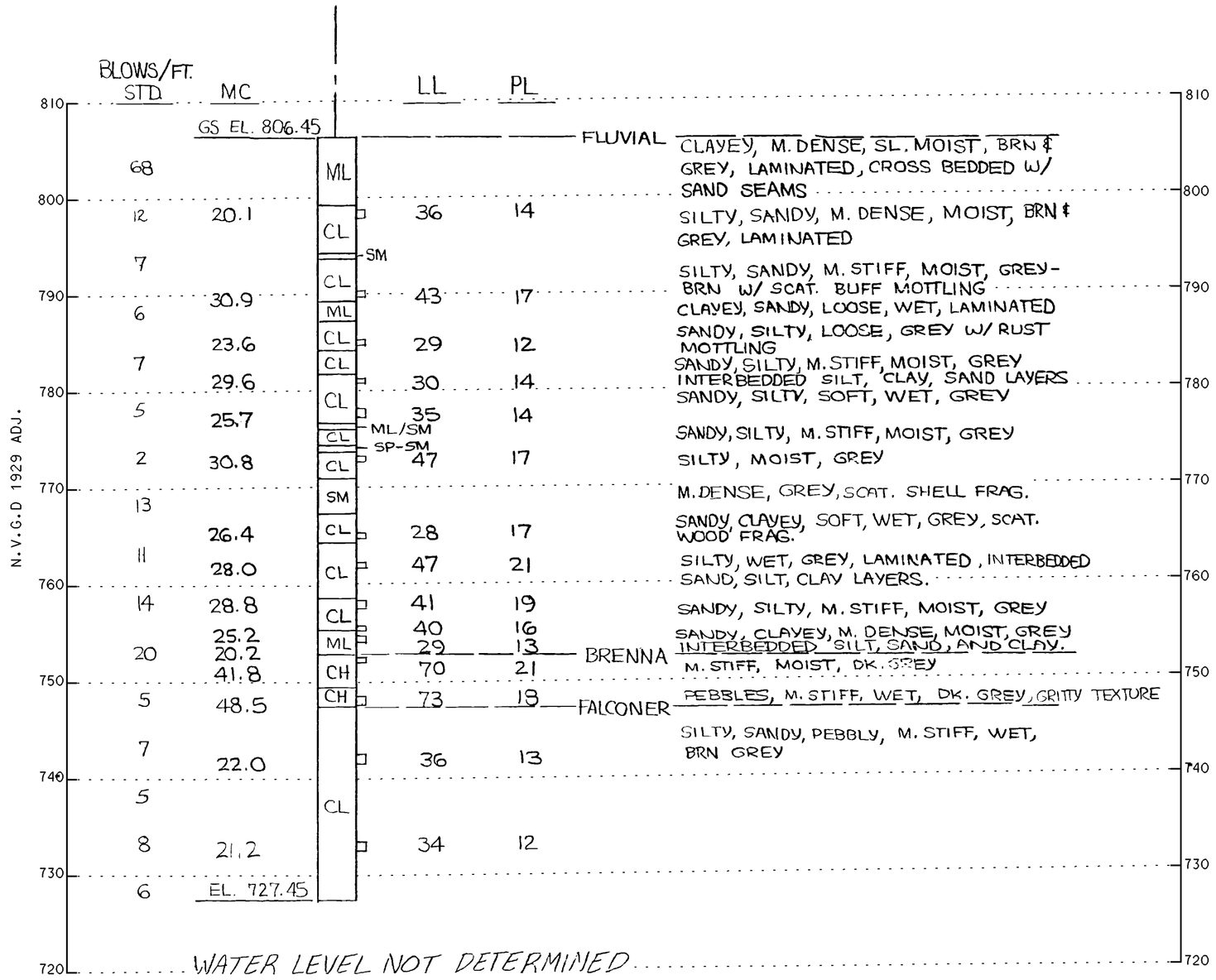

GENERAL BORING LEGEND

84-1M	YEAR OF BORING-BORING NUMBER, BORING TYPE (EG: M=MACHINE, A=AUGER, TP=TEST PIT, P=PIEZOMETER).
1 MAY 1984	DATE OF BORING
G.S. 1020.2	GROUND SURFACE ELEVATION AT BORING
GW	WELL GRADED GRAVELS, GRAVEL - SAND MIXTURE, LITTLE OR NO FINES
GP	POORLY GRADED GRAVELS, LITTLE OR NO FINES
GM	SILTY GRAVELS, GRAVEL - SAND - SILT MIXTURES
GC	CLAYEY GRAVELS, GRAVEL - SAND - CLAY MIXTURES
SW	WELL GRADED SANDS, GRAVELLY SANDS, LITTLE OR NO FINES
SP	POORLY GRADED SANDS, GRAVELLY SANDS, LITTLE OR NO FINES
SM	SILTY SANDS, SAND - SILT MIXTURES
SC	CLAYEY SANDS, SAND - CLAY MIXTURES
ML	INORGANIC SILTS, LIQUID LIMIT LESS THAN 50
MH	INORGANIC SILTS, LIQUID LIMIT GREATER THAN 50
CL	INORGANIC CLAYS, LOW TO MEDIUM PLASTICITY, LIQUID LIMIT LESS THAN 50
CH	INORGANIC CLAYS, HIGH PLASTICITY, LIQUID LIMIT GREATER THAN 50
OL	ORGANIC SILTS OR CLAYS, LOW PLASTICITY, LIQUID LIMIT LESS THAN 50
OH	ORGANIC SILTS OR CLAYS, MEDIUM TO HIGH PLASTICITY, LIQUID LIMIT GREATER THAN 50
PT	PEAT
SP-SM	BORDERLINE MATERIAL
SP&SM	STRATIFIED MATERIAL
1	LOCATION AND SAMPLE NUMBER FOR UNDISTURBED SAMPLE
	NO RECOVERY
W.L. 726.7	WATER LEVEL ON DATE OF BORING
700.0	ELEVATION AT BOTTOM OF BORING

GENERAL BORING NOTES

1. GENERAL: THE UNIFIED SOIL CLASSIFICATION SYSTEM IS USED TO IDENTIFY BASIC SOIL TYPE. THE LEGEND REPRESENTS ONLY THE BASIC SOILS. TO COMPLETE THE CLASSIFICATION, PERTINENT INFORMATION IS ADDED TO THE RIGHT OF THE BORING STAFF, NOTES PERTAINING TO A SPECIFIC BORING ARE SHOWN BELOW THE BORING STAFF.

2. MOISTURE CONTENT: THE NATURAL MOISTURE CONTENT IN PERCENT OF DRY WEIGHT (MC) IS SHOWN TO THE LEFT OF THE BORING STAFF.

3. BLOW COUNT (SPT): BLOW COUNTS ARE SHOWN TO THE LEFT OF THE BORING STAFF AND, EXCEPT AS NOTED, ARE THE NUMBER OF BLOWS NECESSARY TO DRIVE THE SAMPLER USED A DISTANCE OF 12". STANDARD BLOW COUNTS ARE FOR A STANDARD PENETRATION TEST (SPT) USING A 1⅜" X 2" SAMPLER, 140 LB. HAMMER AND A 30" DROP. FOR NON-STANDARD BLOW COUNTS, SAMPLER SIZE, HAMMER WEIGHT AND HEIGHT OF DROP ARE AS SHOWN.

4. ATTERBERG LIMITS: LIQUID LIMIT (LL) AND PLASTIC LIMIT (PL) ARE SHOWN TO THE RIGHT OF THE BORING STAFF.

5. D_{10} SIZE: THE GRAIN SIZE IN MILLIMETERS OF WHICH 10% OF THE SAMPLE IS FINER IS SHOWN TO THE LEFT OF THE BORING STAFF.

6. RQD: ROCK QUALITY DESIGNATION (RQD) IS SHOWN TO THE LEFT OF THE PERCENT RECOVERY COLUMN. RQD IS THE PERCENT RECOVERY CONSISTING OF UNBROKEN PIECES LONGER THAN 4".

7. % RECOVERY: PERCENT CORE RECOVERY IS SHOWN TO THE LEFT OF THE BORING STAFF. PERCENT RECOVERY IS LENGTH OF CORE RECOVERED/LENGTH OF CORE CUT X 100. UNLESS SPECIFIED OTHERWISE, ALL CORE IS 4" DIAMETER.

8. ELEVATIONS REFERENCED TO N.G.V.D. 1929 ADJ.

9 THE BORINGS SHOW SUMMARIES OF INFORMATION RECORDED ON THE ORIGINAL FIELD LOGS. THESE LOGS ARE AVAILABLE FOR INSPECTION AT THE ST. PAUL DISTRICT OFFICE. ARRANGEMENTS TO INSPECT LOGS CAN BE MADE BY CALLING (651) 290-5599.

US Army Corps of Engineers
St. Paul District

Symbol	Description	Date	Appr.

DESIGNED: K.S.N. | CHECKED: K.S.N. | DRAWN: G.R.S. | DESIGNED: | CHECKED:
SCALE: AS SHOWN | DATE: JAN 2000
CADD FILE NAME: gfb210000.dgn
SOL. NO.:
AE APPROVING OFFICIAL:
ED-D | ED-H

DEPARTMENT OF THE ARMY
ST. PAUL, MINNESOTA
CORPS OF ENGINEERS
ST. PAUL DISTRICT

G. F., N.D. & E. G. F., MN.
GEOLOGICAL DATA
LEGEND, GENERAL NOTES & BORING LOGS: 85-16M

DRAWING NUMBER:
R-P-GF-10/004

SHT 1 OF 3

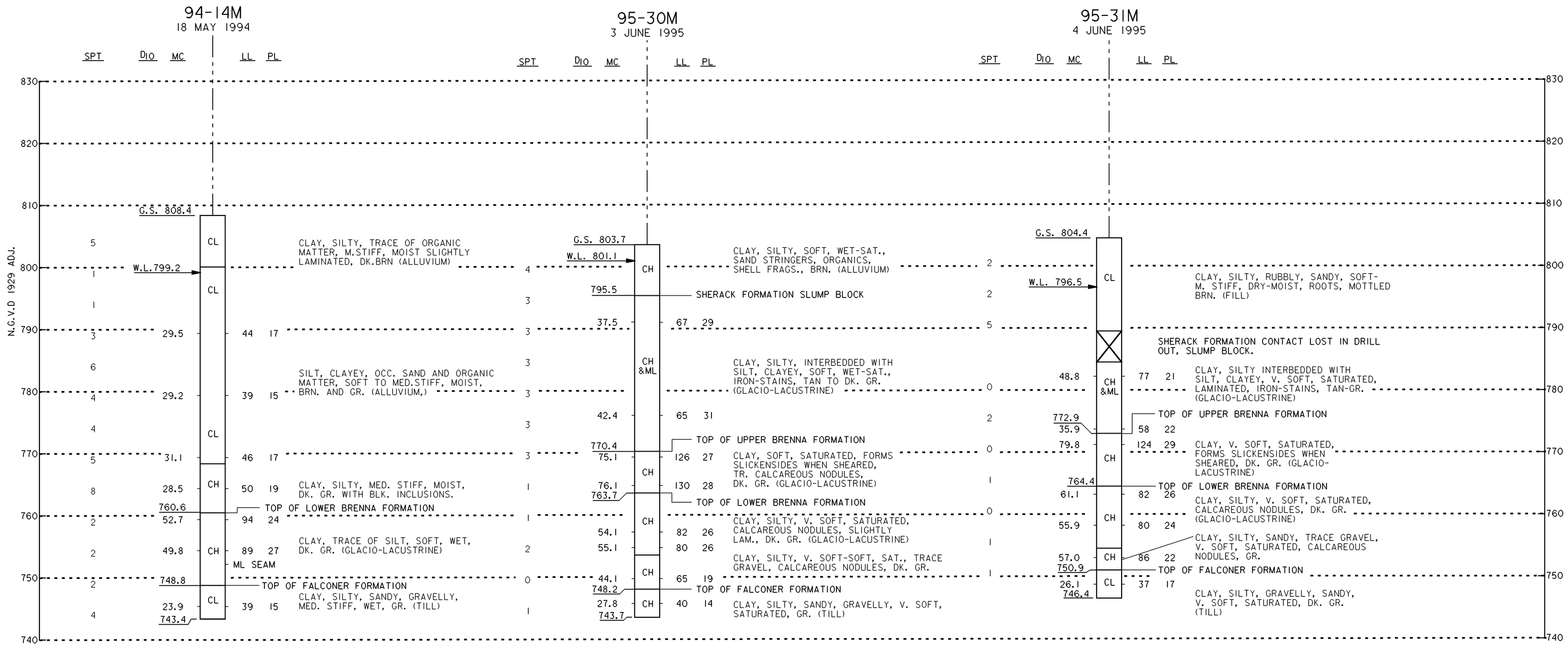

NOTES

1) WATER LEVEL DETERMINED AFTER 35 MINUTES
   BOTTOM OF AUGER =EL.798.4
   BOTTOM OF HOLE =EL.794.2
2) HOLLOW STEM AUGER SET TO EL.794.4. HOLE STABILIZED WITH DRILLIING MUD BETWEEN EL.794.4-788.4. HOLLOW STEM AUGER RESET TO EL. 789.4 HOLE STABILIZED WITH DRILLING MUD BELOW EL.789.4
3) HOLE BACKFILLED WITH TREMIED CEMENT - BENTONITE GROUT. AND TOPPED OFF WITH BENTONITE CHIPS.

NOTES

1. WATER LEVEL DETERMINED AFTER $4^{1}/_{2}$ HOURS IN OFFSET HOLE.
   SOLID STEM AUGER SET TO EL. 789.7. THEN WITHDRAWN.
   BOTTOM OF HOLE = EL. 798.7.
2. HOLLOW STEM AUGER SET TO EL. 799.7. HOLE STABILIZED WITH CLEAN DRILLING WATER BELOW EL. 799.7.
3. HOLE BACKFILLED WITH TREMIED CEMENT-BENTONITE GROUT.

NOTES

1. WATER LEVEL DETERMINED AFTER 5 HOURS IN OFFSET HOLE.
   SOLID STEM AUGER SET TO EL. 794.4. THEN WITHDRAWN.
   BOTTOM OF HOLE = EL. 795.9.
2. HOLLOW STEM AUGER SET TO EL. 795.9. HOLE STABILIZED WITH CLEAN DRILLING WATER BETWEEN EL. 795.9-789.4. RESET HOLLOW STEM AUGER TO EL. 785.4. HOLE STABILIZED WITH CLEAN DRILLING WATER BELOW EL. 785.4.
3. WATER LOSS IN RUBBLE ZONE BETWEEN EL. 794.4 -789.4.
4. HOLE BACKFILLED WITH TREMIED CEMENT-BENTONITE GROUT.

US Army Corps of Engineers
St. Paul District

Symbol	Description	Date	Appr.

DEPARTMENT OF THE ARMY
ST. PAUL, MINNESOTA
CORPS OF ENGINEERS
ST. PAUL DISTRICT

DESIGNED: K.S.N. ED-D
CHECKED: K.S.N.
DRAWN: G.R.S.
DESIGNED: ED-H
CHECKED:
SCALE: AS SHOWN
DATE: JAN 2000
CADD FILE NAME: gtb12100001.dgn
SOL. NO.:
AE APPROVING OFFICIAL:

G. F., N.D. & E. G. F., MN.
GEOLOGICAL DATA
BORING LOGS:
94-14M, 95-30M & 95-31M

DRAWING NUMBER:
R-P-GF-10/005

SHT 2 OF 3

99-147M

15-16 JUNE 1999

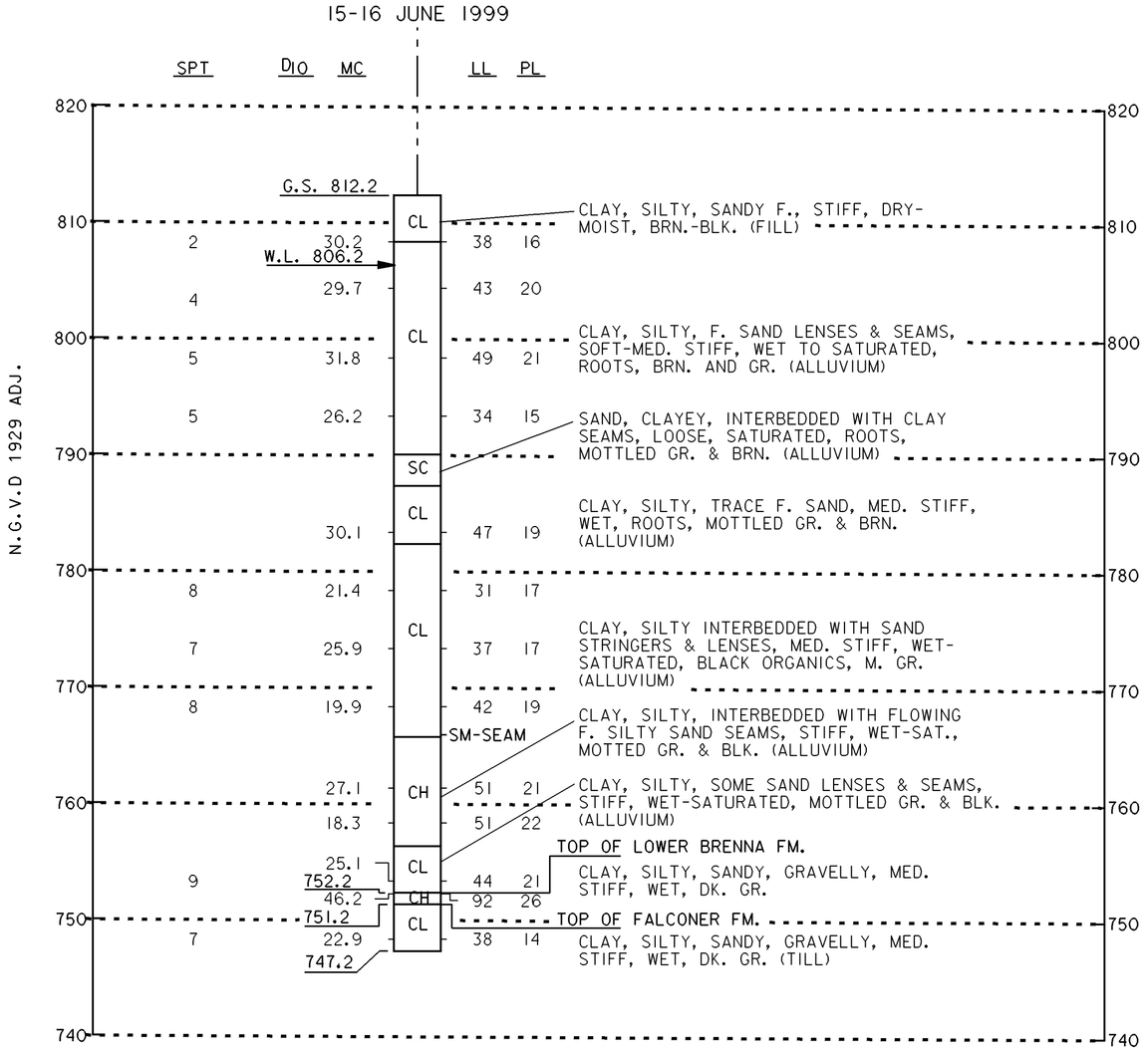

NOTES

1. WATER LEVEL DETERMINED IN OFFSET UNCASED HOLE AFTER 22 HOURS.
   HOLE DRILLED TO EL. 802.2'.
   HOLE OPEN TO EL. 804.3'.
2. HOLLOW STEM AUGER SET TO EL. 752.2'.
3. BACKIFLLED HOLE WITH TREMIED CEMENT BENTONITE GROUT.

US Army Corps of Engineers
St. Paul District

Symbol	Description	Date	Appr.

DESIGNED: K.S.N. | SCALE: AS SHOWN | DATE: JAN 2000
CHECKED: K.S.N. | CADD FILE NAME: gtb210002.dgn
DRAWN: G.R.S. | SOL. NO.:
DESIGNED: | AE APPROVING OFFICIAL:
CHECKED:

DEPARTMENT OF THE ARMY
ST. PAUL, MINNESOTA
CORPS OF ENGINEERS
ST. PAUL DISTRICT

G. F., N.D. & E. G. F., MN.

GEOLOGICAL DATA

BORING LOG: 99-147M

DRAWING NUMBER:
R-P-GF-10/006

SHT 3 OF 3

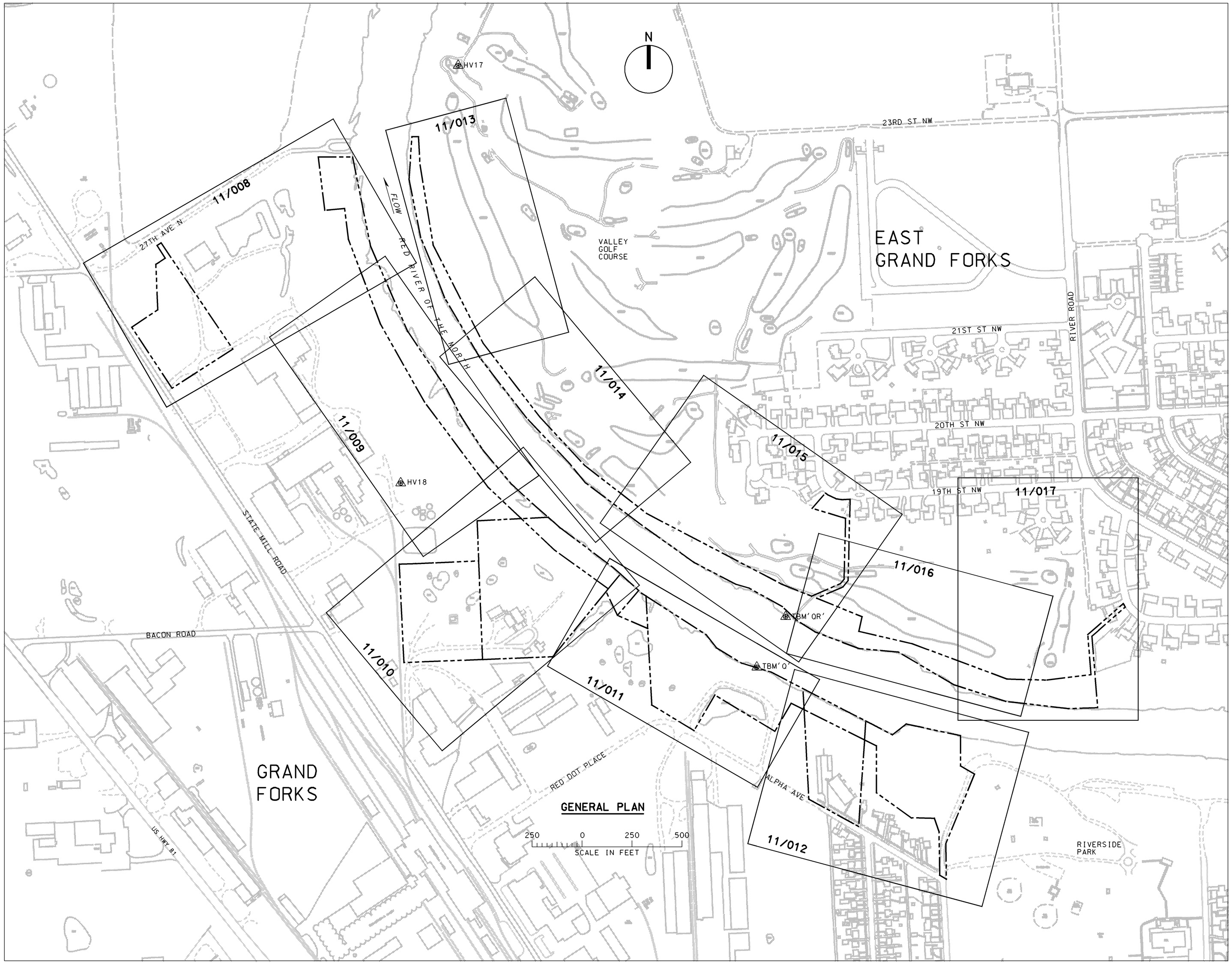

GENERAL PLAN

US Army Corps of Engineers
St. Paul District

Symbol	Description	Date	Appr.
	REVISED	02-12-00	RGB

DESIGNED: CAA/EPP
CHECKED: RGB
DRAWN: CAA/EPP
DESIGNED:
CHECKED:

SCALE: AS SHOWN
DATE: JAN 2000
CADD FILE NAME: 0016A000.DGN
SOL. NO:
AE APPROVING OFFICIAL:

DEPARTMENT OF THE ARMY
ST. PAUL, MINNESOTA
CORPS OF ENGINEERS
ST. PAUL DISTRICT

BANK STABILIZATION RIVERSIDE DAM
REAL ESTATE
GENERAL MAP

DRAWING NUMBER:
R-N-GF-11/007.1

SHT 1 OF 12

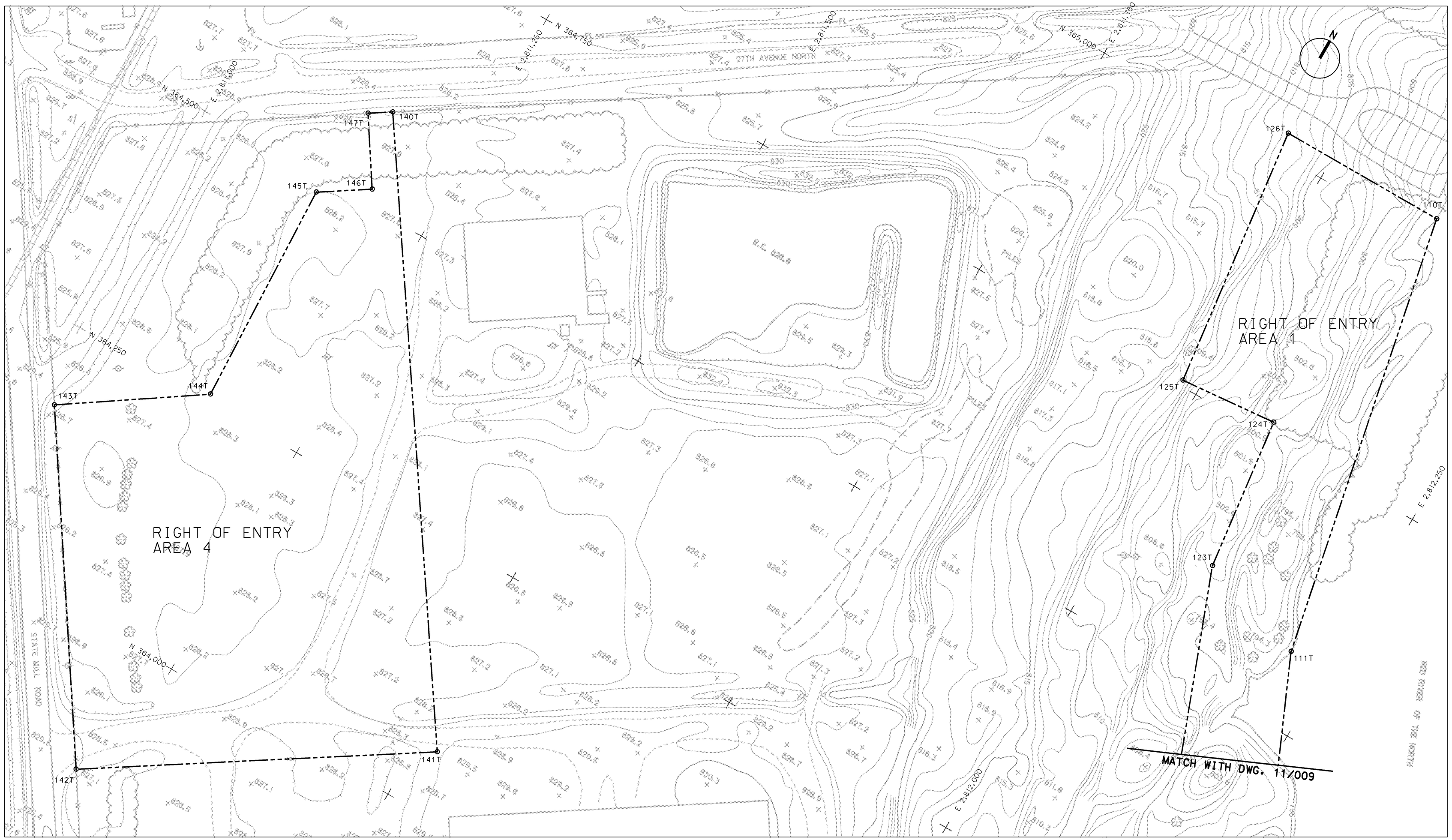

PLAN

50 0 50 100
SCALE IN FEET

US Army Corps of Engineers
St. Paul District

Symbol	Description	Date	Appr.

DESIGNED: CAA/EPP
CHECKED: RGB
DRAWN: CAA/EPP
DESIGNED:
CHECKED:

SCALE: AS SHOWN
CADD FILE NAME: CONE4001.DGN
SOL. NO:
DATE: JAN 2000
AE APPROVING OFFICIAL:

DEPARTMENT OF THE ARMY
ST. PAUL, MINNESOTA
CORPS OF ENGINEERS
ST. PAUL DISTRICT

BANK STABILIZATION RIVERSIDE DAM
REAL ESTATE
BOAT LAUNCH

DRAWING NUMBER:
R-N-GF-11/008

SHT 2 OF 12

PLAN

50 0 50 100
SCALE IN FEET

US Army Corps of Engineers
St. Paul District

Symbol	Description	Date	Appr.

DEPARTMENT OF THE ARMY
ST. PAUL, MINNESOTA
CORPS OF ENGINEERS
ST. PAUL DISTRICT

ED-D
DESIGNED: CAA/EPP
CHECKED: RGB
DRAWN: CAA/EPP

ED-H
DESIGNED:
CHECKED:

SCALE: AS SHOWN
DATE: JAN 2000
CADD FILE NAME: cm164002.DGN
SOL. NO:
AE APPROVING OFFICIAL:

BANK STABILIZATION RIVERSIDE DAM
REAL ESTATE
RDO FOODS

DRAWING NUMBER:
R-N-GF-11/009

SHT 3 OF 12

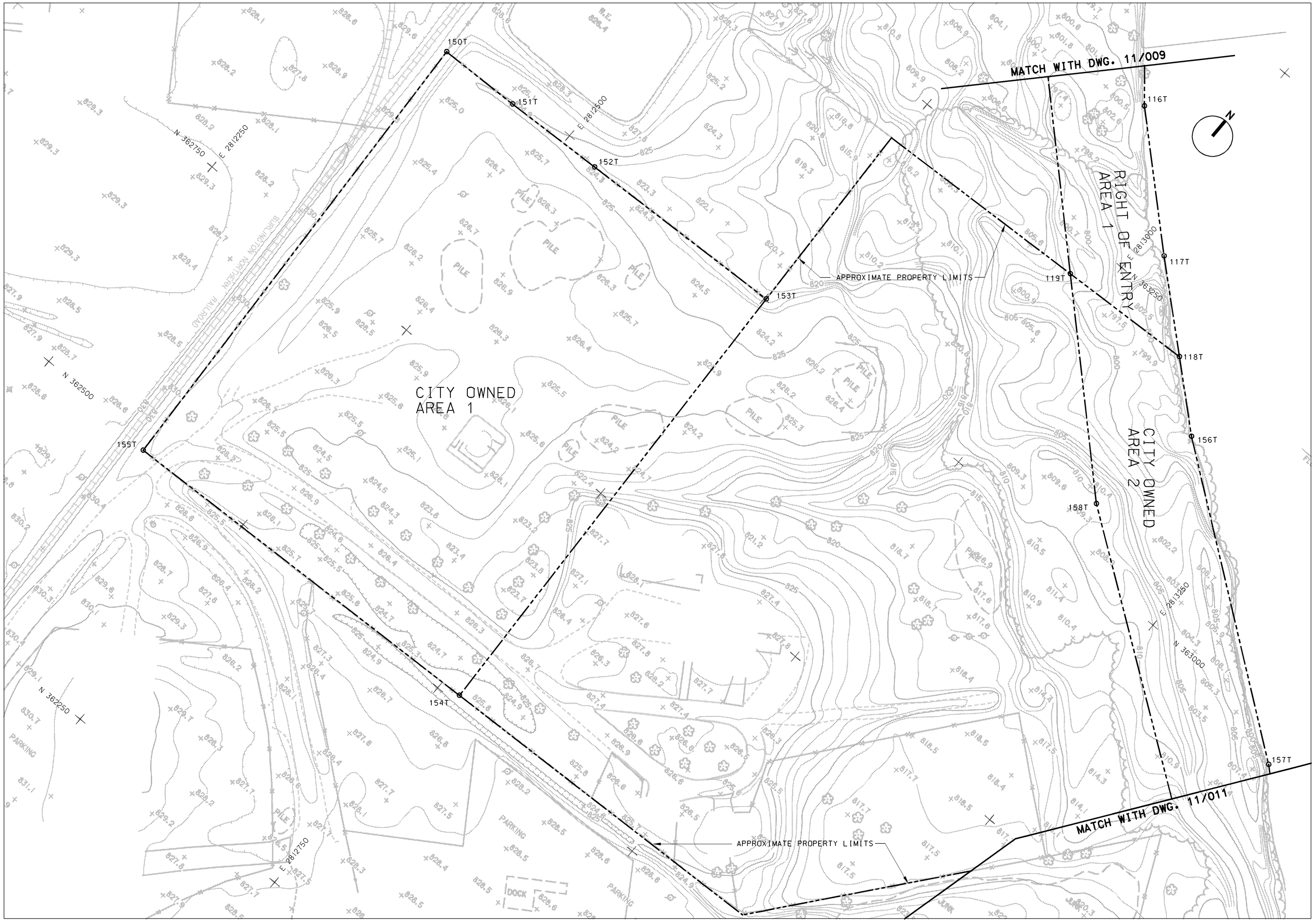

PLAN

50 0 50 100
SCALE IN FEET

US Army Corps of Engineers
St. Paul District

Symbol	Description	Date	Appr.

DESIGNED: CAA/EPP
CHECKED: RGB
DRAWN: CAA/EPP
DESIGNED:
CHECKED:
SCALE: AS SHOWN
DATE: JAN 2000
CADD FILE NAME: cn16400j.DGN
SOL. NO.:
AE APPROVING OFFICIAL:

DEPARTMENT OF THE ARMY
ST. PAUL, MINNESOTA
CORPS OF ENGINEERS
ST. PAUL DISTRICT

BANK STABILIZATION RIVERSIDE DAM

REAL ESTATE

CITY OF GRAND FORKS
WORKSHOPS

DRAWING NUMBER:
R-N-GF-11/010

SHT 4 OF 12

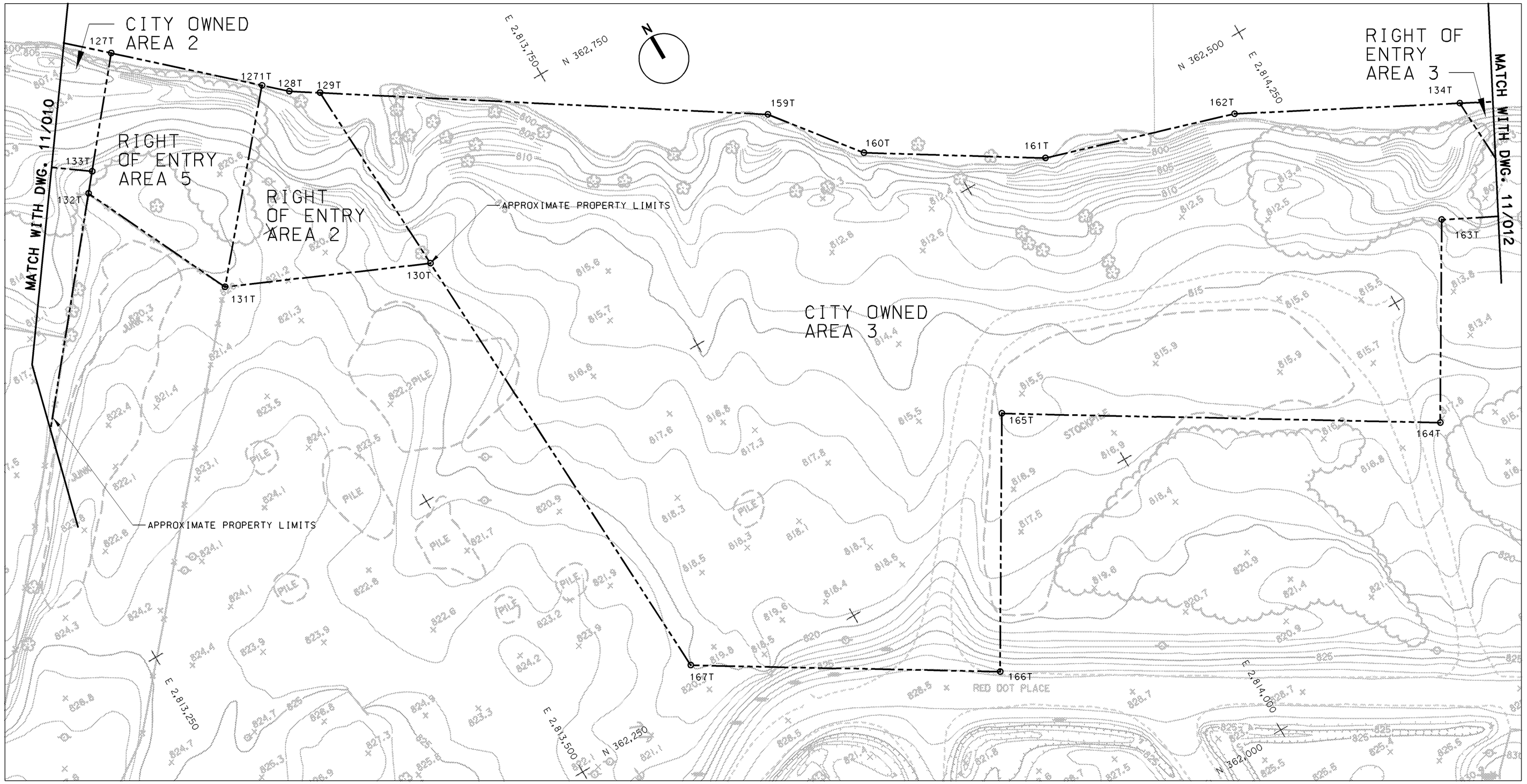

PLAN

50 0 50 100
SCALE IN FEET

US Army Corps of Engineers
St. Paul District

Symbol	Description	Date	Appr.

DEPARTMENT OF THE ARMY
ST. PAUL, MINNESOTA
CORPS OF ENGINEERS
ST. PAUL DISTRICT

DESIGNED: CAA/EPP
CHECKED: RGB
DRAWN: CAA/EP
DESIGNED:
CHECKED:
SCALE: AS SHOWN
CADD FILE NAME: cn164004.DGN
SOL. NO:
DATE: JAN 2000
AE APPROVING OFFICIAL:

BANK STABILIZATION RIVERSIDE DAM

REAL ESTATE

RIVERSIDE DAM
WEST BANK

DRAWING NUMBER:
R-N-GF-11/011

SHT 5 OF 12

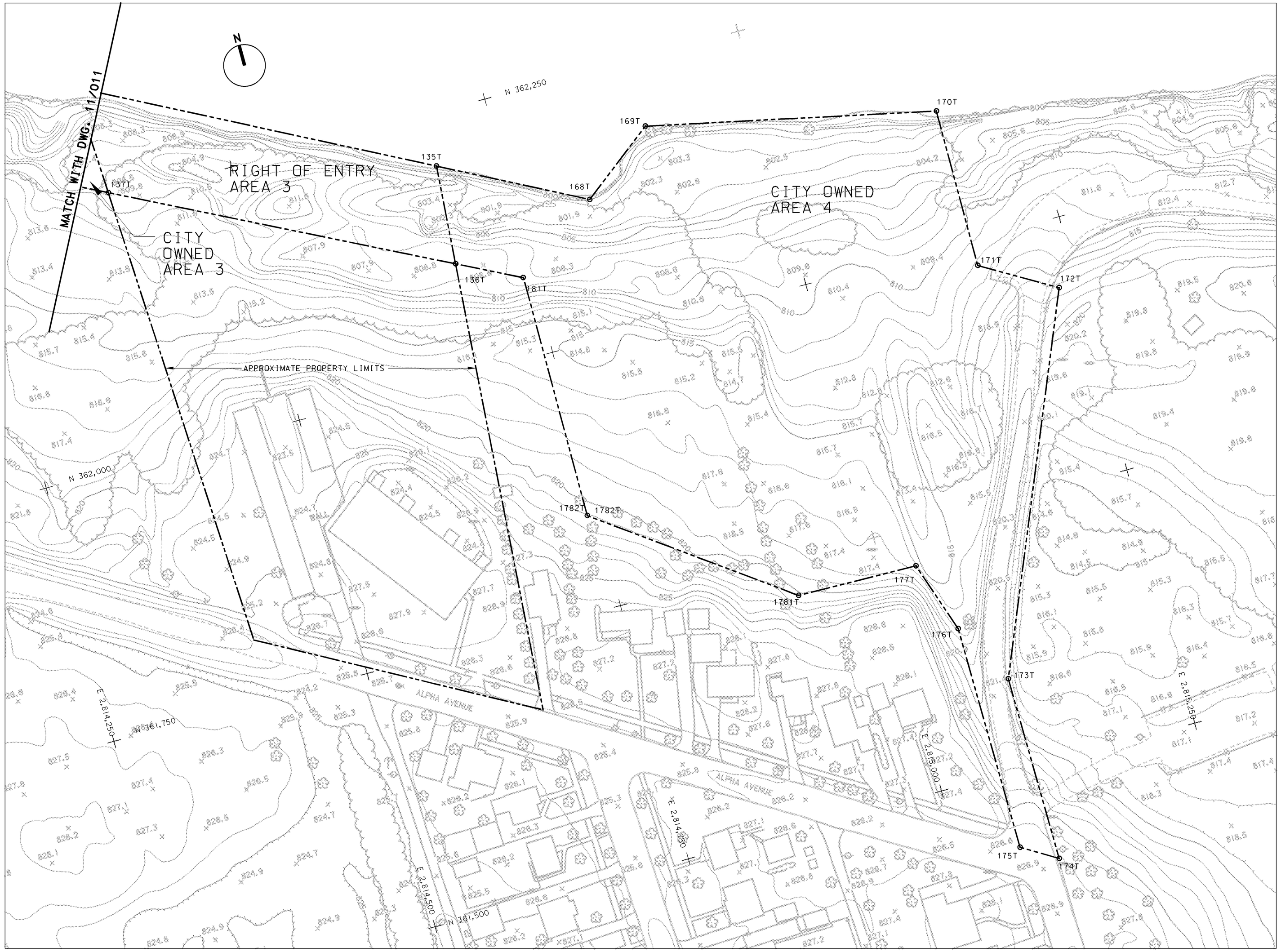

PLAN

50 0 50 100
SCALE IN FEET

US Army Corps of Engineers
St. Paul District

Symbol	Description	Date	Appr.

DEPARTMENT OF THE ARMY
ST PAUL, MINNESOTA
CORPS OF ENGINEERS
ST. PAUL DISTRICT

DESIGNED: CAA/EPP
ED-D
CHECKED: RGB
DRAWN: CAA/EPP
DESIGNED:
ED-H
CHECKED:

SCALE: AS SHOWN
CADD FILE NAME: Cn16-005.DGN
SOL. NO:
DATE: JAN 2000
AE APPROVING OFFICIAL:

BANK STABILIZATION RIVERSIDE DAM
REAL ESTATE
RIVERSIDE PARK

DRAWING NUMBER:
R-N-GF-11/012
SHT 6 OF 12

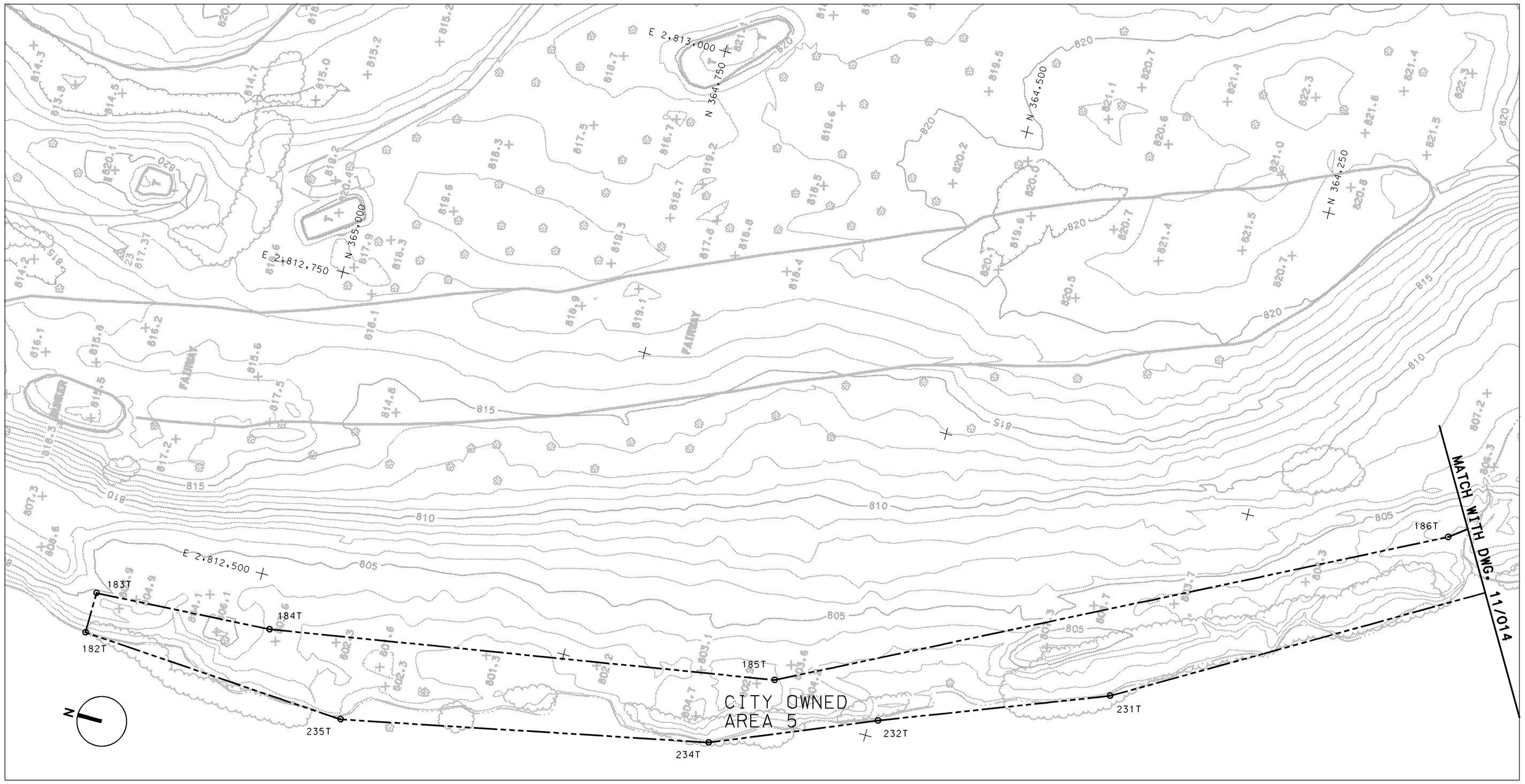

PLAN

50 0 50 100
SCALE IN FEET

US Army Corps of Engineers
St. Paul District

Symbol	Description	Date	Appr.

DEPARTMENT OF THE ARMY
ST. PAUL, MINNESOTA
CORPS OF ENGINEERS
ST. PAUL DISTRICT

DESIGNED: CAA/EPP
CHECKED: RGB
DRAWN: CAA/EPP
DESIGNED:
CHECKED:
SCALE: AS SHOWN
CADD FILE NAME: Cn16-006.DGN
SOL. NO:
DATE: JAN 2000
AE APPROVING OFFICIAL:

BANK STABILIZATION RIVERSIDE DAM

REAL ESTATE

VALLEY GOLF COURSE
FAIRWAY 2

DRAWING NUMBER:
R-N-GF-11/013

SHT 7 OF 12

PLAN

50 0 50 100
SCALE IN FEET

US Army Corps of Engineers
St. Paul District

Symbol	Description	Date	Appr.

DESIGNED: CAA/EPP
CHECKED: RGB
DRAWN: CAA/EPP
DESIGNED:
CHECKED:
SCALE: AS SHOWN
DATE: JAN 2000
CADD FILE NAME: cn164007.DGN
SOL. NO.:
AE APPROVING OFFICIAL:

DEPARTMENT OF THE ARMY
ST. PAUL, MINNESOTA
CORPS OF ENGINEERS
ST. PAUL DISTRICT

BANK STABILIZATION RIVERSIDE DAM
REAL ESTATE
VALLEY GOLF COURSE
TEE 18

DRAWING NUMBER:
R-N-GF-11/014

SHT 8 OF 12

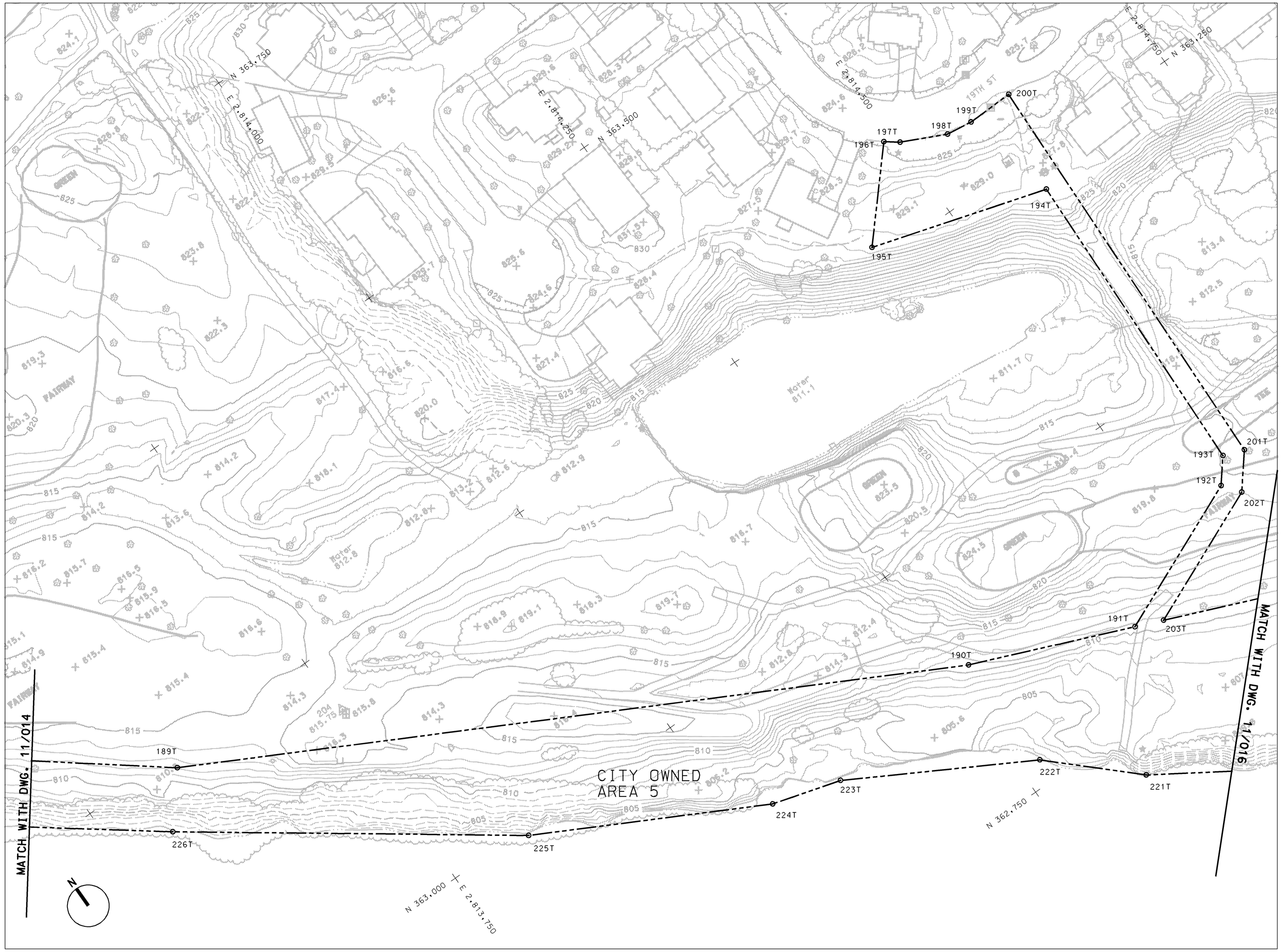

PLAN

50 0 50 100
SCALE IN FEET

US Army Corps of Engineers
St. Paul District

Symbol	Description	Date	Appr.

DESIGNED: CAA/EPP
CHECKED:
DRAWN: RGB
DESIGNED: CAA/EPP
CHECKED:
SCALE: AS SHOWN
CADD FILE NAME: CM164008.DGN
SOL. NO:
DATE: JAN 2000
AE APPROVING OFFICIAL:

DEPARTMENT OF THE ARMY
ST. PAUL, MINNESOTA
CORPS OF ENGINEERS
ST. PAUL DISTRICT

BANK STABILIZATION RIVERSIDE DAM

REAL ESTATE

RIVERSIDE DAM
EAST BANK

DRAWING NUMBER:
R-N-GF-11/015

SHT 9 OF 12

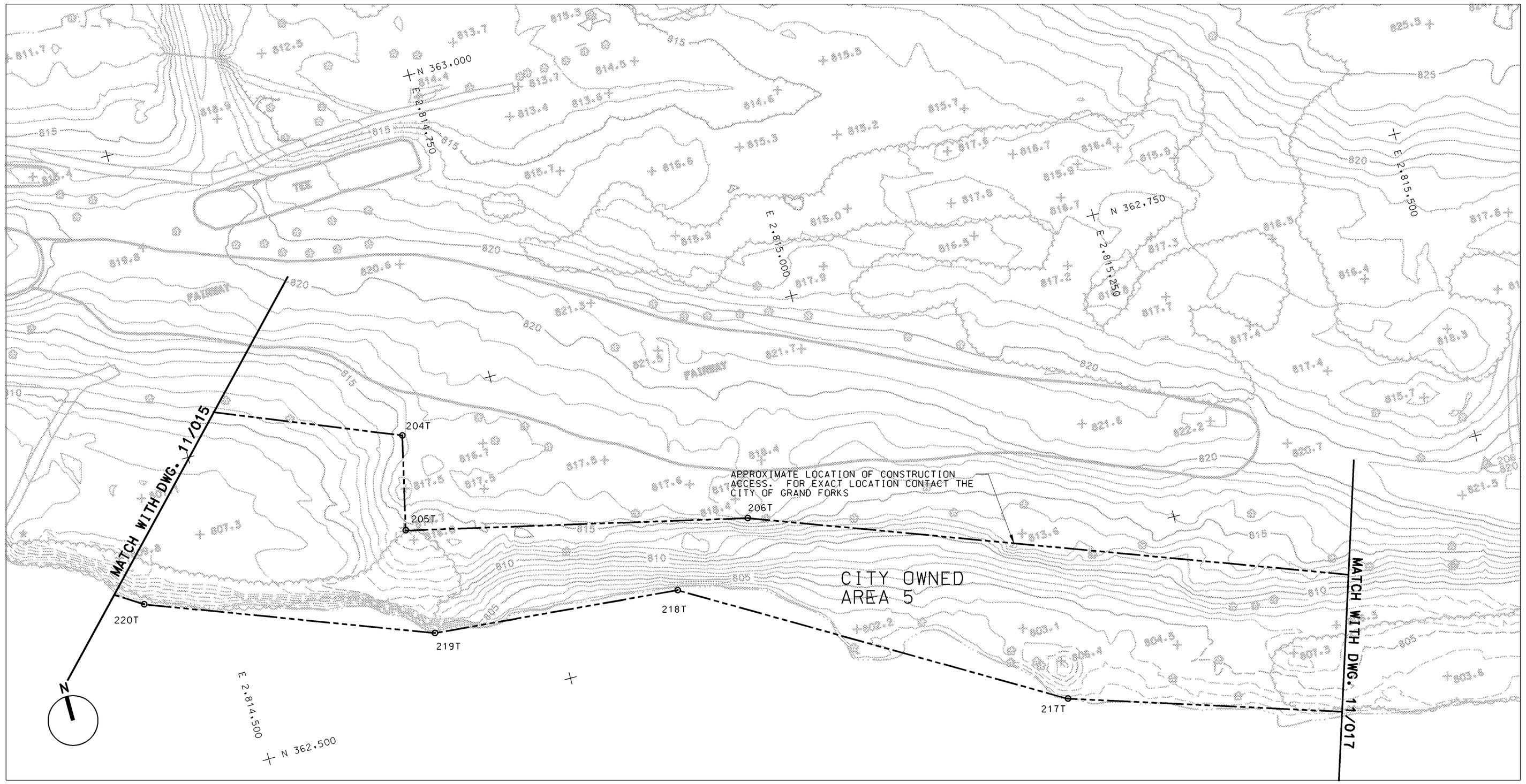

PLAN

50 0 50 100
SCALE IN FEET

US Army Corps of Engineers
St. Paul District

Symbol	Description	Date	Appr.

DESIGNED: CAA/EPP
CHECKED: RGB
DRAWN: CAA/EPP
DESIGNED:
CHECKED:
SCALE: AS SHOWN
DATE: JAN 2000
CADD FILE NAME: cm164009.DGN
SOL. NO:
AE APPROVING OFFICIAL:

DEPARTMENT OF THE ARMY
ST. PAUL, MINNESOTA
CORPS OF ENGINEERS
ST. PAUL DISTRICT

BANK STABILIZATION RIVERSIDE DAM

REAL ESTATE

VALLEY GOLF COURSE
FAIRWAY 16

DRAWING NUMBER:
R-N-GF-11/016

SHT 10 OF 12

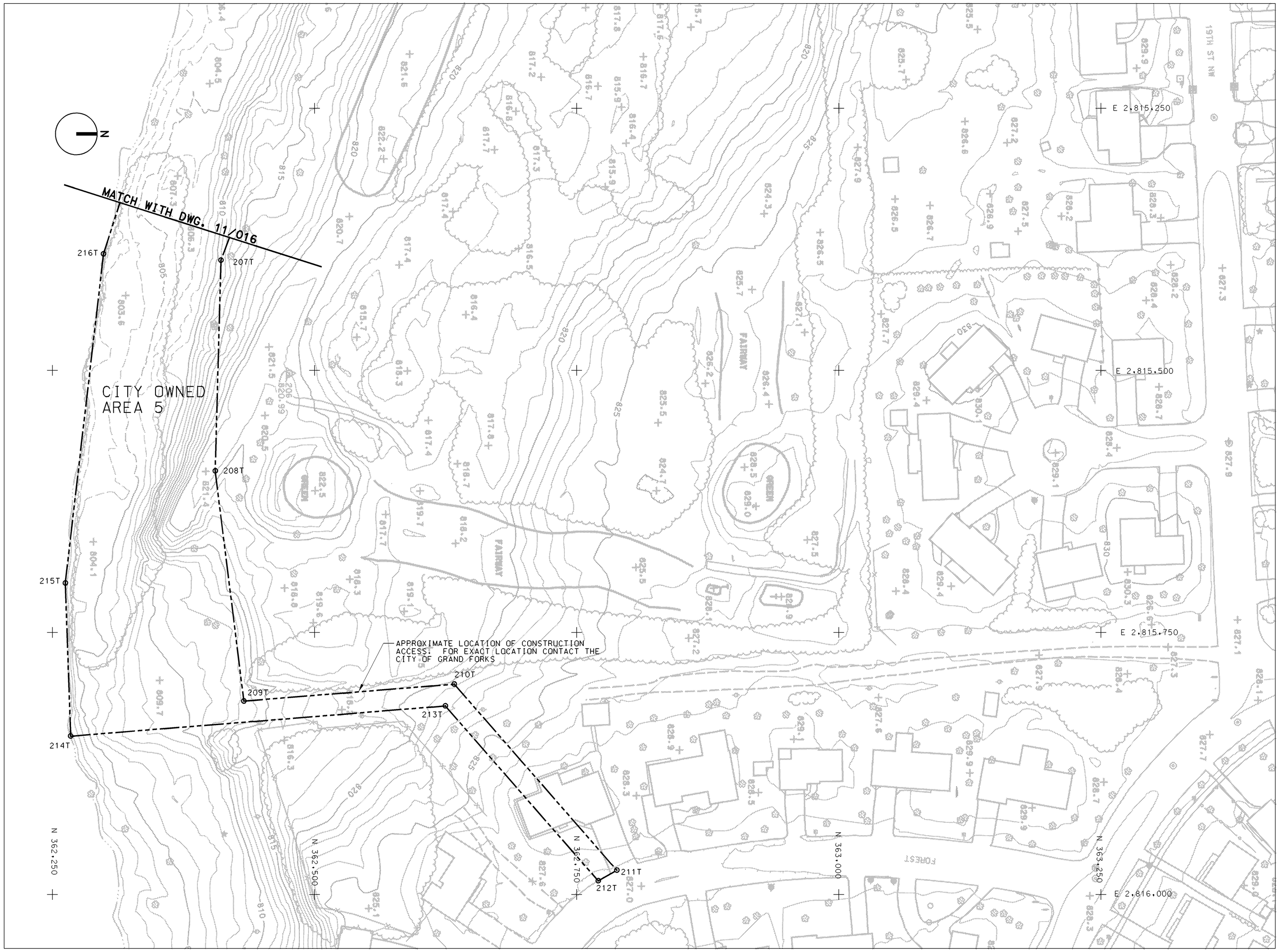

PLAN

50 0 50 100
SCALE IN FEET

US Army Corps of Engineers
St. Paul District

Symbol	REVISED	Date	Appr.
		02-12-00	RGB

DESIGNED: CAA/EPP
CHECKED: RGB
DRAWN: CAA/EPP
DESIGNED:
CHECKED:
SCALE: AS SHOWN
CADD FILE NAME: cm16-010.DGN
SOL. NO.:
DATE: JAN 2000
AE APPROVING OFFICIAL:

DEPARTMENT OF THE ARMY
ST. PAUL, MINNESOTA
CORPS OF ENGINEERS
ST. PAUL DISTRICT

BANK STABILIZATION RIVERSIDE DAM

REAL ESTATE

VALLEY GOLF COURSE
FAIRWAY 15

DRAWING NUMBER:
R-N-GF-11/017.1

SHT 11 OF 12

RIGHT OF ENTRY AREA 1 — AREA = 5.37 ACRES

POINT ID	DISTANCE (FEET)	BEARING	NORTHING (Y)	EASTING (X)
110 T	456.36	S 11°24′18″ E	365022.713	2812120.783
111 T	462.55	S 23°33′53″ E	364575.360	2812211.025
112 T	346.89	S 34°00′53″ E	364151.381	2812395.946
113 T	153.93	S 27°46′06″ E	363863.845	2812590.000
114 T	201.04	S 33°05′39″ E	363727.638	2812661.718
115 T	224.59	S 39°41′30″ E	363559.210	2812771.490
116 T	148.96	S 47°28′55″ E	363386.389	2812914.926
117 T	100.28	S 48°38′45″ E	363285.719	2813024.719
118 T	134.93	S 87°13′08″ W	363219.462	2813099.994
119 T	230.77	N 46°28′31″ W	363212.915	2812965.221
120 T	529.65	N 36°44′03″ W	363371.839	2812797.894
121 T	449.43	N 29°28′23″ W	363796.314	2812481.105
122 T	452.00	N 20°43′30″ W	364187.580	2812259.981
123 T	155.95	N 6°53′29″ W	364610.331	2812100.026
124 T	100.05	S 84°51′26″ W	364765.151	2812081.314
125 T	268.47	N 6°53′30″ W	364756.183	2811981.670
126 T	171.33	N 90°00′00″ E	365022.713	2811949.456
110 T			365022.713	2812120.783

RIGHT OF ENTRY AREA 2 — AREA = 0.36 ACRES

POINT ID	DISTANCE (FEET)	BEARING	NORTHING (Y)	EASTING (X)
1271 T	22.28	S 47°54′44″ E	362853.706	2813552.456
128 T	24.61	S 57°13′32″ E	362838.771	2813568.992
129 T	162.43	S 2°55′09″ E	362825.449	2813589.684
130 T	165.37	N 66°34′45″ W	362663.233	2813597.956
131 T	163.85	N 40°25′12″ E	362728.962	2813446.215
1271 T			362853.706	2813552.456

RIGHT OF ENTRY AREA 3 — AREA = 0.71 ACRES

POINT ID	DISTANCE (FEET)	BEARING	NORTHING (Y)	EASTING (X)
134 T	353.79	S 62°42′12″ E	362362.614	2814374.583
135 T	94.97	S 3°54′03″ W	362200.365	2814688.978
136 T	338.06	N 63°25′12″ W	362105.612	2814682.517
137 T	105.89	N 3°02′00″ W	362256.876	2814380.186
134 T			362362.614	2814374.583

RIGHT OF ENTRY AREA 4 — AREA = 3.72 ACRES

POINT ID	DISTANCE (FEET)	BEARING	NORTHING (Y)	EASTING (X)
140 T	641.51	S 33°58′54″ E	364593.315	2811163.064
141 T	361.64	S 57°15′10″ W	364061.368	2811521.619
142 T	364.92	N 33°24′44″ W	363865.743	2811217.452
143 T	156.51	N 56°02′19″ E	364170.356	2811016.504
144 T	228.06	N 2°20′40″ W	364257.788	2811146.316
145 T	55.94	N 56°56′41″ E	364485.655	2811136.987
146 T	76.01	N 33°03′18″ W	364516.170	2811183.877
147 T	24.63	N 56°56′46″ E	364579.879	2811142.417
140 T			364593.315	2811163.064

RIGHT OF ENTRY AREA 5 — AREA = 0.39 ACRES

POINT ID	DISTANCE (FEET)	BEARING	NORTHING (Y)	EASTING (X)
127 T	123.36	S 47°54′39″ E	362936.393	2813460.909
1271 T	163.85	S 40°25′12″ W	362853.706	2813552.456
131 T	132.21	N 25°33′14″ W	362728.962	2813446.215
132 T	17.91	N 39°08′02″ E	362848.242	2813389.183
133 T	95.73	N 39°08′03″ E	362862.136	2813400.488
127 T			362936.393	2813460.909

** RIGHT OF ENTRY AREAS ARE APPROXIMATE

CITY OWNED AREA 1

POINT ID	DISTANCE (FEET)	BEARING	NORTHING (Y)	EASTING (X)
150 T	82.93	N 88°23′27″ E	362985.541	2812354.146
151 T	101.76	N 87°31′30″ E	362987.870	2812437.047
152 T	213.24	N 87°32′28″ E	362992.264	2812538.708
153 T	493.61	S 2°14′41″ E	363001.413	2812751.752
154 T	394.01	S 87°46′16″ W	362508.177	2812771.085
155 T	493.24	N 2°41′57″ W	362492.853	2812377.374
150 T			362985.541	2812354.146

CITY OWNED AREA 2

POINT ID	DISTANCE (FEET)	BEARING	NORTHING (Y)	EASTING (X)
118 T	79.33	S 48°38′44″ E	363219.462	2813099.994
156 T	331.89	S 53°14′29″ E	363167.050	2813159.539
157 T	47.80	S 47°54′39″ E	362968.435	2813425.434
127 T	95.73	S 39°08′04″ W	362936.393	2813460.909
133 T	332.52	N 54°19′28″ W	362862.136	2813400.488
158 T	227.76	N 46°28′32″ W	363056.062	2813130.369
119 T	134.93	N 87°13′08″ E	363212.915	2812965.221
118 T			363219.462	2813099.994

CITY OWNED AREA 3

POINT ID	DISTANCE (FEET)	BEARING	NORTHING (Y)	EASTING (X)
129 T	358.44	S 57°13′31″ E	362825.449	2813589.684
159 T	82.70	S 38°14′11″ E	362631.413	2813891.061
160 T	145.19	S 58°20′37″ E	362566.457	2813942.243
161 T	155.21	S 73°09′28″ E	362490.259	2814065.828
162 T	180.28	S 62°42′12″ E	362445.289	2814214.380
134 T	105.89	S 3°02′00″ E	362362.614	2814374.583
137 T	72.32	N 63°25′12″ W	362256.876	2814380.186
163 T	162.42	S 30°22′26″ W	362289.236	2814315.508
164 T	350.61	N 58°46′49″ W	362149.113	2814233.384
165 T	206.66	S 30°22′25″ W	362330.841	2813933.547
166 T	247.42	N 58°46′50″ W	362152.543	2813829.050
167 T	382.94	N 2°55′08″ W	362280.787	2813617.457
130 T	162.43	N 2°55′09″ W	362663.233	2813597.956
129 T			362825.449	2813589.684

CITY OWNED AREA 4

POINT ID	DISTANCE (FEET)	BEARING	NORTHING (Y)	EASTING (X)
135 T	149.66	S 62°42′13″ E	362200.365	2814688.978
168 T	87.73	N 52°06′24″ E	362131.730	2814821.976
169 T	278.03	S 77°57′22″ E	362185.614	2814891.210
170 T	152.39	S 0°00′00″ E	362127.599	2815163.124
171 T	80.45	S 59°43′37″ E	361975.209	2815163.124
172 T	376.10	S 22°24′11″ W	361934.653	2815232.602
173 T	178.07	S 0°48′54″ E	361586.938	2815089.263
174 T	38.83	N 59°04′18″ W	361408.882	2815091.796
175 T	216.71	N 0°48′54″ W	361428.840	2815058.486
176 T	72.12	N 18°54′46″ W	361645.527	2815055.404
177 T	115.43	N 89°06′41″W	361713.756	2815032.027
1781 T	215.39	N 54°18′31″W	361715.546	2814916.611
1782 T	234.97	N 0°00′00″ E	361841.211	2814741.675
181 T	66.07	N 63°33′10″ W	362076.185	2814741.675
136 T	94.97	N 3°54′03″ E	362105.612	2814682.517
135 T			362200.365	2814688.978

CITY OWNED AREA 5

POINT ID	DISTANCE (FEET)	BEARING	NORTHING (Y)	EASTING (X)
182 T	32.76	S 89°21′04″ E	365124.276	2812418.150
183 T	141.50	S 3°07′12″ E	365123.905	2812450.911
184 T	406.38	S 9°16′00″ E	364982.618	2812458.612
185 T	551.19	S 26°59′10″ E	364581.540	2812524.052
186 T	466.65	S 37°35′45″ E	364090.362	2812774.171
187 T	329.68	S 42°51′10″ E	363720.623	2813058.865
188 T	392.71	S 52°11′57″ E	363478.933	2813283.086
189 T	760.28	S 62°24′09″ E	363238.233	2813593.386
190 T	162.70	S 67°55′34″ E	362886.030	2814267.161
191 T	157.55	N 66°22′57″ E	362824.887	2814417.935
192 T	28.74	N 38°34′39″ E	362888.008	2814562.293
193 T	304.59	N 1°27′30″ E	362910.474	2814580.213
194 T	175.17	N 73°28′33″ W	363214.961	2814587.964
195 T	101.39	N 41°24′06″ E	363264.783	2814420.029
196 T	15.43	S 53°06′44″ E	363340.834	2814487.081
197 T	45.94	S 64°40′24″ E	363331.570	2814499.425
198 T	25.20	S 82°18′56″ E	363311.919	2814540.947
199 T	44.47	N 88°45′47″ E	363308.550	2814565.916
200 T	406.39	S 1°27′30″ W	363309.510	2814610.378
201 T	40.40	S 38°34′37″ W	362903.254	2814600.036
202 T	142.97	S 66°22′56″ W	362871.668	2814574.842
203 T	244.31	S 67°56′51″ E	362814.390	2814443.848
204 T	75.95	S 12°57′49″ W	362722.662	2814670.284
205 T	274.00	S 77°02′12″ E	362648.644	2814653.245
206 T	506.20	S 69°36′40″ E	362587.178	2814920.261
207 T	201.09	S 88°27′46″ E	362410.823	2815394.750
208 T	221.28	N 82°55′46″ E	362405.429	2815595.766
209 T	201.30	N 4°36′28″ W	362432.667	2815815.364
210 T	235.66	N 48°51′03″ E	362633.318	2815799.193
211 T	20.40	S 29°43′58″ E	362788.388	2815976.646
212 T	221.55	S 48°51′03″ W	362770.671	2815986.765
213 T	358.57	S 4°36′27″ E	362624.885	2815819.937
214 T	146.08	S 88°02′02″ W	362267.475	2815848.741
215 T	316.10	N 83°23′49″ W	362262.463	2815702.743
216 T	271.13	N 72°18′34″ W	362298.811	2815388.738
217 T	324.28	N 59°27′37″ W	362381.201	2815130.429
218 T	197.36	N 85°01′31″ W	362545.980	2814851.133
219 T	233.83	N 69°21′08″ W	362563.094	2814654.520
220 T	106.82	N 57°25′36″ W	362645.546	2814435.714
221 T	102.42	N 46°54′00″ W	362703.054	2814345.699
222 T	190.96	N 60°54′33″ W	362773.034	2814270.917
223 T	68.39	N 74°07′30″ W	362865.880	2814104.043
224 T	234.49	N 62°21′36″ W	362884.587	2814038.263
225 T	339.11	N 54°23′57″ W	362993.369	2813830.536
226 T	338.53	N 53°03′55″ W	363190.780	2813554.805
227 T	123.80	N 39°17′38″ W	363394.204	2813284.212
228 T	313.24	N 43°21′55″ W	363490.012	2813205.811
229 T	380.42	N 37°47′33″ W	363717.735	2812990.725
230 T	348.47	N 30°22′47″ W	364018.358	2812757.600
231 T	186.80	N 21°07′00″ W	364318.980	2812581.369
232 T	136.65	N 22°22′58″ W	364493.240	2812514.069
234 T	295.32	N 11°22′55″ W	364619.599	2812462.032
235 T	215.64	N 3°49′44″ E	364909.113	2812403.750
182 T			365124.276	2812418.150

HORIZONTAL CONTROL MONUMENTS

HV17 EAST GRAND FORKS, MINNESOTA. REBAR APPROXIMATELY 20′ SOUTH OF PARK BENCH WITH CONCRETE SUPPORTS NEAR FORK IN THE ASPHALT GOLF TRAIL OF VALLEY VIEW GOLF COURSE.
Y=365,479.95053 X=2,812,649.15321

HV18 GRAND FORKS, NORTH DAKOTA. APPROXIMATELY 80′ SOUTH-EAST OF CENTER CONTROL VALVE EAST OF GRAVEL ACCESS ROAD TO RDO FOODS. REBAR IS 2.28′ SOUTHEAST OF MOSTLY SOUTHERN OVERHEAD POWER POLE AND 45.57′ SOUTHWEST OF THE GUIDEWIRE ANCHORS.
Y=363,390.63568 X=2,812,361.65122

NOTES:

1. COORDINATES BASED ON NORTH DAKOTA STATE PLANE GRID SYSTEM, NORTH ZONE.

US Army Corps of Engineers
St. Paul District

Symbol	Description	Date	Appr.
	REVISED	02-17-00	RGB

DESIGNED: CAA/EPP
CHECKED: RGB
DRAWN: CAA/EPP
DESIGNED:
CHECKED:
SCALE: NONE
DATE: JAN 2000
CADD FILE NAME: CN164011.DGN
SOL. NO:
AE APPROVING OFFICIAL:

DEPARTMENT OF THE ARMY
ST. PAUL, MINNESOTA
CORPS OF ENGINEERS
ST. PAUL DISTRICT

BANK STABILIZATION RIVERSIDE DAM
REAL ESTATE
DATA SETS

DRAWING NUMBER:
R-N-GF-11/018.1

SHT 12 OF 12

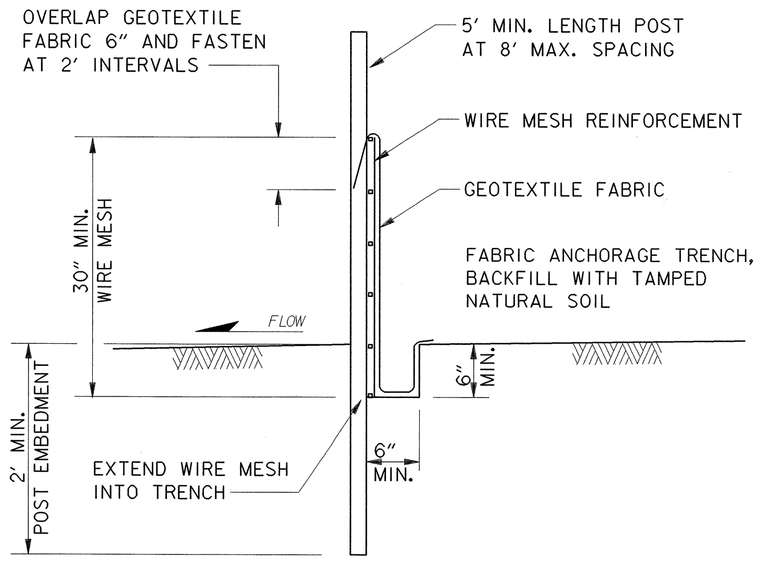

PERIMETER SEDIMENT CONTROL

SILT FENCE SHOULD BE INSTALLED PRIOR TO MAJOR SOIL DISTURBANCE IN THE DRAINAGE AREA. SILT FENCE SHOULD BE PLACED AT THE BOTTOM OF A SLOPE OR MINOR DRAINAGEWAY, PERPENDICULAR TO THE DIRECTION OF WATER FLOW. IT CAN ALSO BE PLACED AT THE PERIMETER OF THE WORK AREA.

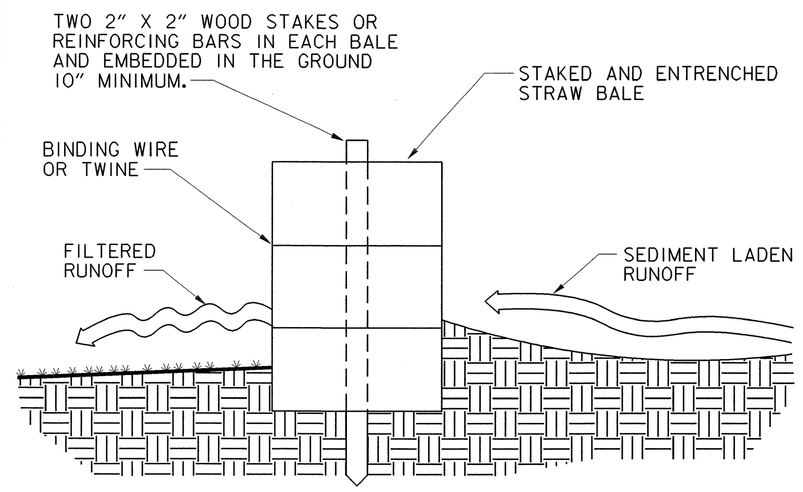

DRAINAGEWAY RUNOFF CONTROL

STRAW BAIL BARRIERS SHOULD BE INSTALLED PRIOR TO MAJOR SOIL DISTURBANCE IN THE DRAINAGE AREA. THE BARRIERS SHOULD BE PLACED PERPENDICULAR TO THE FLOW, ACROSS THE BOTTOM OF A SLOPE OR MINOR DRAINAGEWAY. IT CAN ALSO BE USED AT THE PERIMETER OF THE WORK AREA. THE BAILS MUST BE FIRMLY STAKED AND PLACED END TO END. THERE CAN BE NO GAPS BETWEEN THE BAILS.

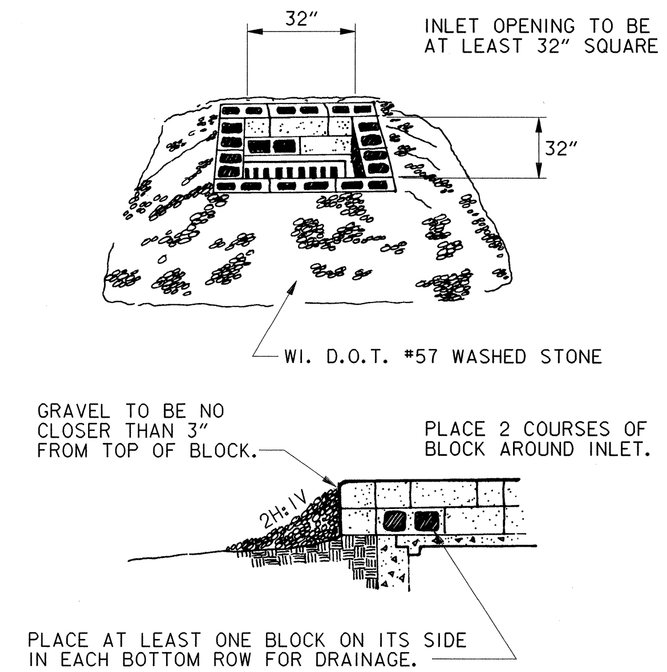

BLOCK AND GRAVEL INLET PROTECTION

STORM DRAIN INLETS CAN BE PROTECTED FROM SEDIMENT LADEN RUNOFF USING A DRY BLOCK AND GRAVEL FILTER. LAY CONCRETE BLOCKS ON FIRM, SMOOTH FOUNDATION EXCAVATED BELOW STORM DRAIN TOP. PLACE AT LEAST ONE CONCRETE BLOCK ON ITS SIDE IN EACH BOTTOM ROW. PLACE WIRE MESH WITH ½" OPENINGS OVER ALL BLOCK OPENINGS USED FOR DRAINAGE.

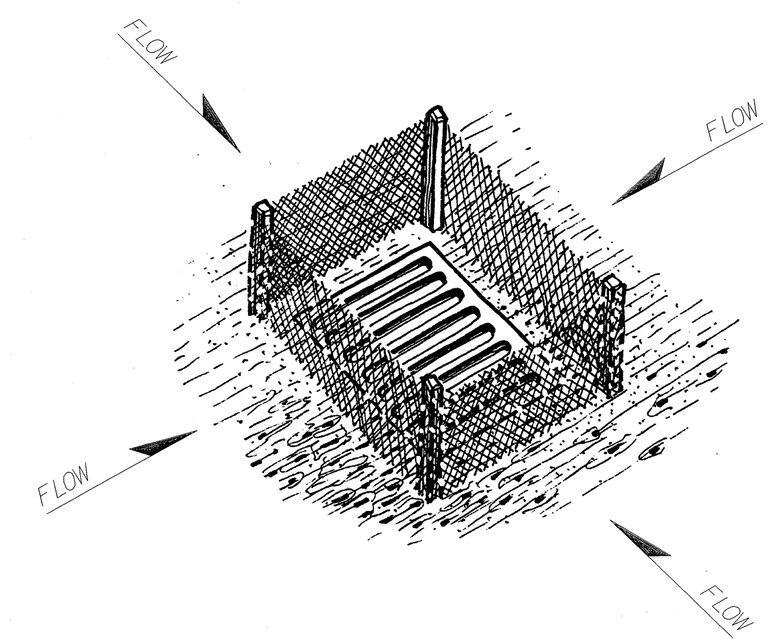

STORM SEWER INLET CONTROL

STORM DRAIN INLETS SHALL BE PROTECTED FROM SEDIMENT LADEN RUNOFF UNTIL SOIL IN THE DRAINAGE AREA IS STABILIZED. SILT FENCE (SEE PERIMETER SEDIMENT CONTROL), STRAW BAIL BARRIERS (SEE DRAINAGEWAY RUNOFF CONTROL) OR CONCRETE BLOCK WITH GRAVEL FILTER (SEE BLOCK AND GRAVEL INLET PROTECTION) MAY BE USED.

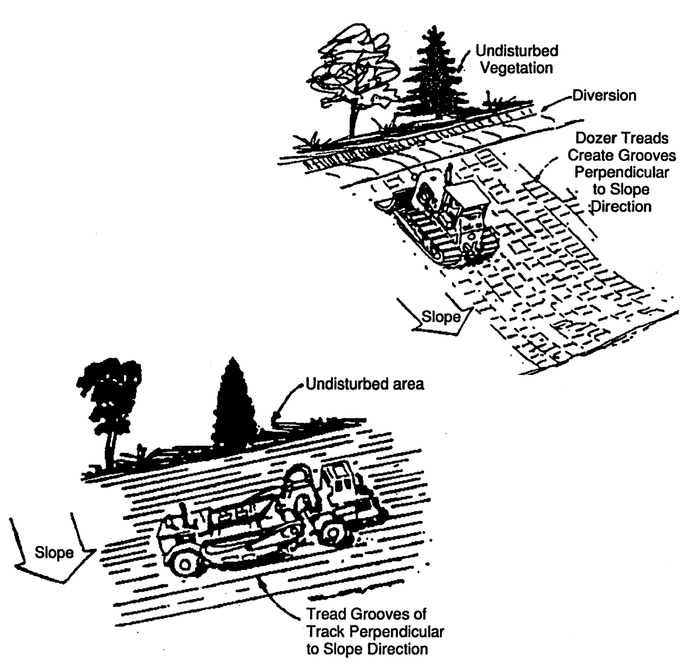

HORIZONTAL SLOPE GRADING

SURFACE ROUGHENING, USING HEAVY EQUIPMENT TO CREATE GROOVES IN THE SOIL PERPENDICULAR TO THE DIRECTION OF WATER FLOW, IS APPROPRIATE FOR SLOPES OF 3:1 OR FLATTER. IT SHOULD BE DONE AS SOON AS POSSIBLE AFTER THE VEGETATION HAS BEEN REMOVED FROM THE SLOPE. SLOPES STEEPER THAN 3:1 BUT LESS THAN 2:1 SHOULD BE GROOVED WITH DISKS OR SPRING HARROWS. STEEPER SLOPES SHOULD BE STAIR-STEPPED.

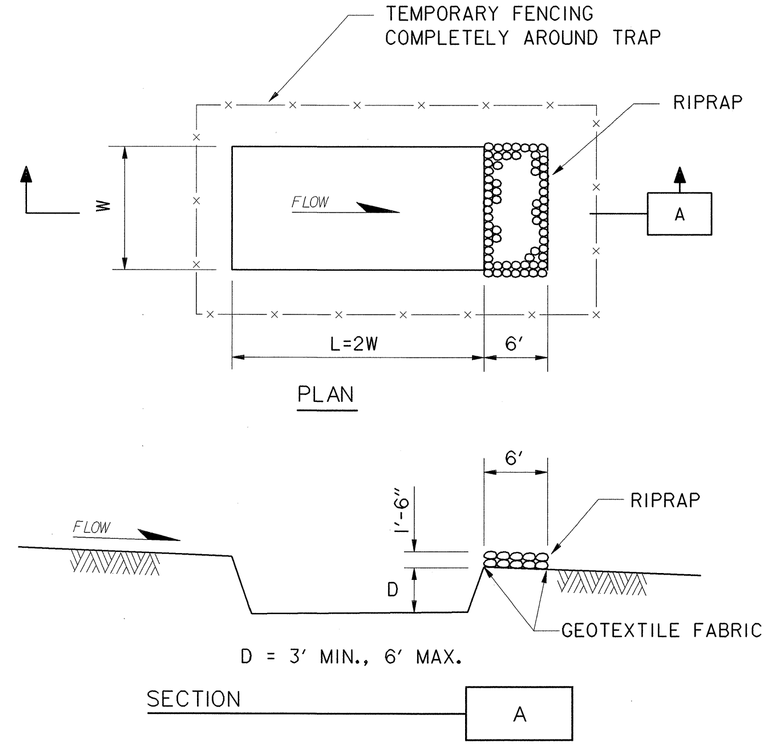

TEMPORARY SEDIMENT TRAP

TEMPORARY SEDIMENT TRAPS CAN BE CONSTRUCTED EITHER BY EXCAVATION OR BY PLACING AN EMBANKMENT ACROSS A DRAINAGEWAY. THE SEDIMENT BASIN SHOULD BE DESIGNED WITH SUFFICIENT DETENTION TIME FOR SEDIMENT TO SETTLE OUT OF THE STORM WATER.

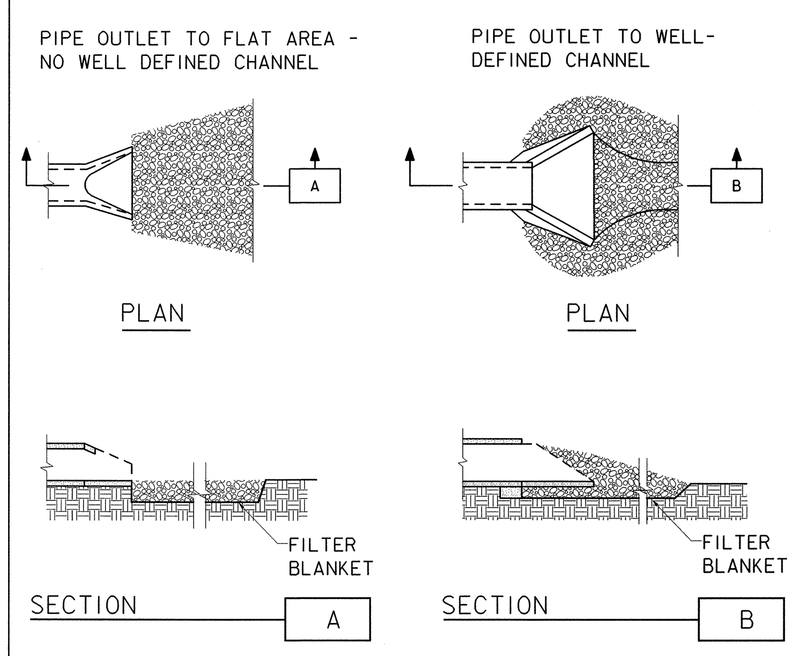

STORM SEWER PIPE OUTLET ENERGY DISSIPATION

ALL STORM SEWER PIPE OUTLETS SHALL HAVE RIPRAP APRONS, DESIGNED TO PREVENT SCOUR.

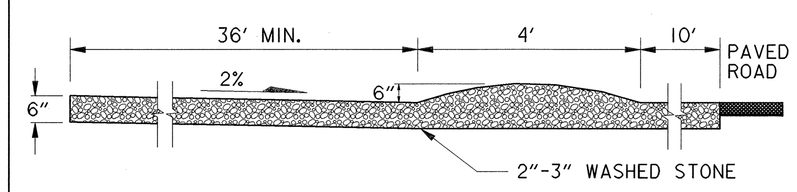

STABILIZED VEHICLE ENTRANCE

STABILIZED VEHICLE ENTRANCE(S) SHALL BE MAINTAINED IN A CONDITION TO PREVENT MUD OR SEDIMENT FROM LEAVING THE SITE. SHOULD MUD BE TRACKED OR WASHED ONTO THE PAVED ROAD, IT MUST BE REMOVED IMMEDIATELY. ENTRANCE SHALL BE SLOPED TO DIVERT RUNOFF TO A SEDIMENT TRAP OR CONTROLLED STORM SEWER INLET.

US ARMY CORPS OF ENGINEERS
ST. PAUL DISTRICT

Symbol	Description	Date	Appr.

Date: 08-29-96
SCALE: NONE
CADD FILE NAME: stgip002.dgn
SOL. NO:
OFFICIAL: AE APPROVING
DESIGNED: RKF
CHECKED:
DRAWN: JIVE
DESIGNED:
CHECKED:
D-3d
H-3d

REFERENCE DRAWING

STANDARD DRAWING
BEST MANAGEMENT PRACTICES
FOR EROSION AND SEDIMENT CONTROL

DRAWING NUMBER:
Z2 - 24

SHT OF